REILLY ARCHITECTURAL

W75 INSWING & OUTSWING CASEMENT WINDOW (WZ3)(IMPACT)

GENERAL NOTES:

1. THE PRODUCT SHOWN HEREIN IS DESIGNED AND MANUFACTURED TO COMPLY WITH THE CURRENT EDITION OF THE FLORIDA BUILDING CODE (FBC), **EXCLUDING** HVHZ AND HAS BEEN EVALUATED ACCORDING TO THE FOLLOWING:
   - ASTM E1886-13a
   - ASTM E1996-17
   - TAS 201-94
   - TAS 202-94
   - TAS 203-94
   - AAMA/WDMA/CSA 101/I.S.2/A440-11/17

2. ADEQUACY OF THE EXISTING STRUCTURAL CONCRETE/MASONRY, 2X FRAMING, AND METAL FRAMING AS A MAIN WIND FORCE RESISTING SYSTEM CAPABLE OF WITHSTANDING AND TRANSFERRING APPLIED PRODUCT LOADS TO THE FOUNDATION IS THE RESPONSIBILITY OF THE ENGINEER OR ARCHITECT OF RECORD FOR THE PROJECT OF INSTALLATION.

3. 1X AND 2X BUCKS (WHEN USED) SHALL BE DESIGNED AND ANCHORED TO PROPERLY TRANSFER ALL LOADS TO THE STRUCTURE. BUCK DESIGN AND INSTALLATION IS THE RESPONSIBILITY OF THE ENGINEER OR ARCHITECT OF RECORD FOR THE PROJECT OF INSTALLATION.

4. INSTALL INDIVIDUAL INSTALLATION ANCHORS WITHIN A TOLERANCE OF ±1/2 INCH OF THE DEPICTED LOCATION IN THE ANCHOR LAYOUT DETAIL (I.E., WITHOUT CONSIDERATION OF TOLERANCES). TOLERANCES ARE NOT CUMULATIVE FROM ONE INSTALLATION ANCHOR TO THE NEXT.

5. THE INSTALLATION DETAILS DESCRIBED HEREIN ARE GENERIC AND MAY NOT REFLECT ACTUAL CONDITIONS FOR A SPECIFIC SITE. IF SITE CONDITIONS CAUSE INSTALLATION TO DEVIATE FROM THE REQUIREMENTS DETAILED HEREIN, A LICENSED ENGINEER OR ARCHITECT SHALL PREPARE SITE SPECIFIC DOCUMENTS FOR USE WITH THIS DOCUMENT.

6. APPROVED IMPACT PROTECTIVE SYSTEM **IS NOT REQUIRED** ON THIS PRODUCT IN AREAS REQUIRING IMPACT RESISTANCE IN WIND ZONE 3 OR LESS.

7. APPROVED IMPACT PROTECTIVE SYSTEM **IS REQUIRED** ON THIS PRODUCT IN AREAS REQUIRING IMPACT RESISTANCE IN WIND ZONE 4.

8. WINDOW FRAME MATERIAL: BRONZE, GALVANIZED STEEL, COR-TEN STEEL, OR STAINLESS STEEL.

9. GLASS MEETS THE REQUIREMENTS OF ASTM E1300 GLASS CHARTS. SEE SHEETS 2-3 FOR GLAZING DETAILS.

TABLE OF CONTENTS

SHEET	SHEET DESCRIPTION
1	GENERAL NOTES
2	GLAZING DETAILS
3	GLAZING DETAILS
4	ELEVATION & DESIGN PRESSURE TABLE
5	ELEVATION & DESIGN PRESSURE TABLE
6	ELEVATION
7	MULLION DESIGN PRESSURE TABLES
8	ANCHOR LAYOUT
9	ANCHOR LAYOUT
10	ANCHOR CAPACITY TABLES
11	ANCHOR CAPACITY TABLES
12	VERTICAL SECTIONS
13	VERTICAL SECTIONS
14	VERTICAL SECTIONS
15	HORIZONTAL SECTIONS
16	HORIZONTAL SECTIONS
17	MULLION SECTIONS
18	ANCHOR DETAILS, ANCHOR SCHEDULE, & INSTALLATION NOTES
19	ANCHOR DETAILS
20	ANCHOR DETAILS
21	ANCHOR DETAILS
22	PROFILE OPTIONS
23	BILL OF MATERIALS & COMPONENTS
24	COMPONENTS
25	COMPONENTS

DESIGN PRESSURE RATING (PSF)

WIDTH (IN.)	HEIGHT (IN.)	DESIGN PRESSURE	MISSILE IMPACT RATING
78.75" X 96.00"		+/- 60 PSF	LARGE & SMALL MISSILE IMPACT

REILLY ARCHITECTURAL
901 Burman Blvd, Building 701 Calverton, NY 11933
P 631-208-0710 F 631-208-0711 www.reillyarch.com

TITLE: W75 INSWING & OUTSWING CASEMENT WINDOW (WZ3) (IMPACT)

GENERAL NOTES

PREPARED BY:
BUILDING DROPS, INC.
1900 NE MIAMI COURT, STE. 2-15
MIAMI, FL 33132
PH: (954)399-8478
FAX: (954)744.4738
WEB: www.buildingdrops.com

REMARKS	BY	DATE
2026 FBC UPDATE	LS	06/26

THE INSTALLATION DETAILS DESCRIBED HEREIN ARE GENERIC AND MAY NOT REFLECT ACTUAL CONDITIONS FOR A SPECIFIC SITE. IF SITE CONDITIONS CAUSE INSTALLATION TO DEVIATE FROM THE REQUIREMENTS DETAILED HEREIN, A LICENSED ENGINEER OR ARCHITECT SHALL PREPARE SITE SPECIFIC DOCUMENTS FOR USE WITH THIS DOCUMENT.

Digitally signed by Hermes F. Norero, P.E.
Reason: I am approving this document
Date: 2026.08.13 17:23:44 -03'00'

HERMES F. NORERO
LICENSE
No. 73778
STATE OF
FLORIDA
PROFESSIONAL ENGINEER

HERMES F. NORERO, P.E.
REGISTERED NO. 73778
BUILDING DROPS, INC
1900 NE MIAMI COURT, STE. 2-15
MIAMI, FL 33132
FBPE CERT. OF AUTHORIZATION No. 29578

FL #: FL47694

DATE: 05.21.2025

DWG. BY: JR | CHK. BY: HFN

SCALE: NTS

DWG. #: RWD019

SHEET: 1 OF 25 | REV. A

7/9/2026 3:04 PM
c:\users\lucianosanchez\building drops, inc\building drops landing - documents\common\projects\2026 code change projects\reilly architectural\cc-26-05871.1 - 2026 code change\dwgs\fl47694-r0\rwd019.dwg

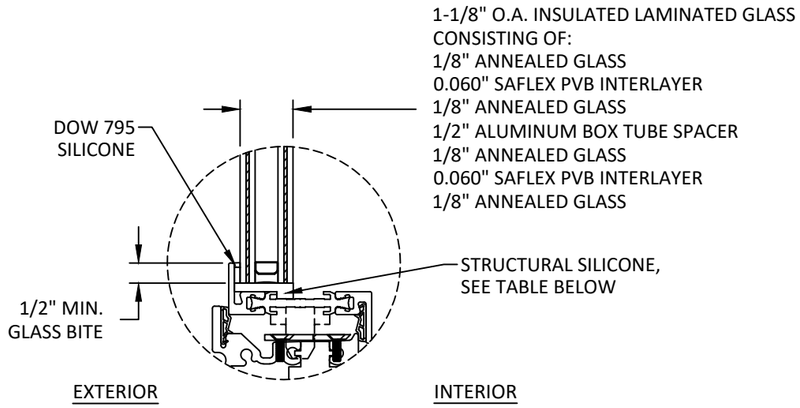

GLAZING DETAIL 1

INSIDE GLAZED

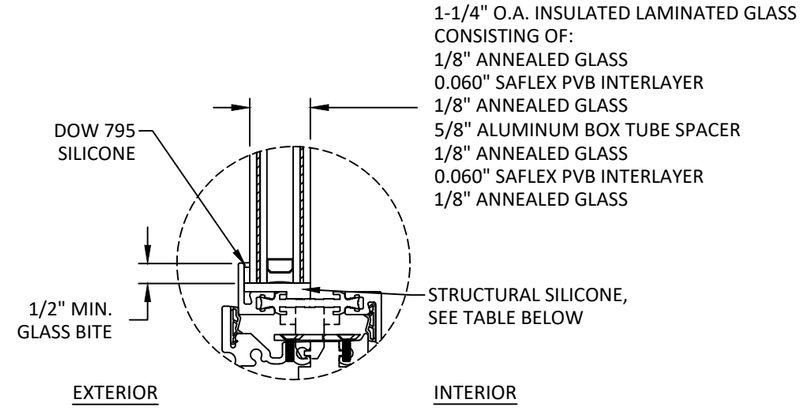

GLAZING DETAIL 2

INSIDE GLAZED

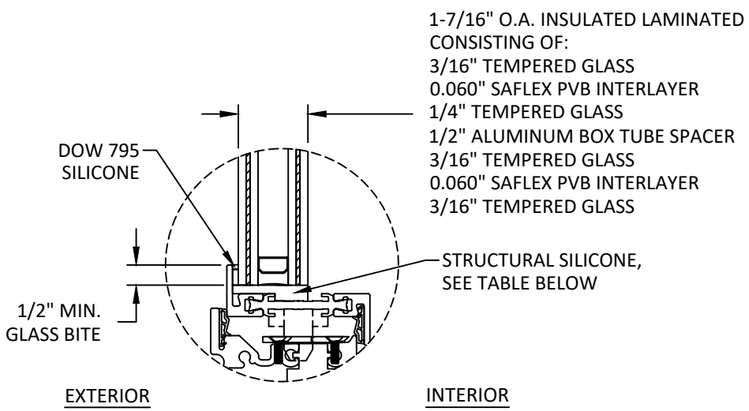

GLAZING DETAIL 3

INSIDE GLAZED

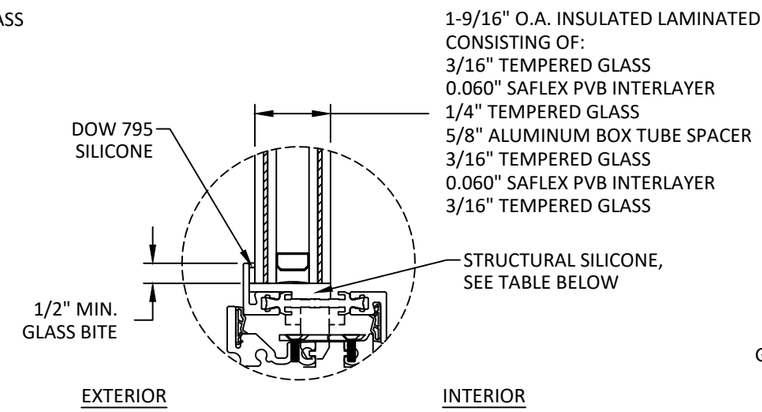

GLAZING DETAIL 4

INSIDE GLAZED

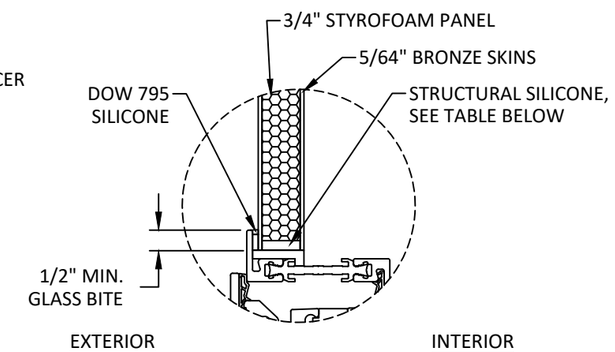

GLAZING DETAIL 5

INSIDE GLAZED

QUALIFIED SILICONE OPTIONS
DOW 995
DOW 121
SIKA SG-20

GLAZING NOTES:

1. GLASS TYPE COMPLIES WITH ASTM E1300 REQUIREMENTS. PER THE FBC, TEMPER AND SAFETY GLAZING REQUIREMENTS SHALL BE REVIEWED ON A SITE SPECIFIC BASIS.
2. SETTING BLOCK DUROMETER HARDNESS OF 70-90 (SHORE A) AS REFERENCED IN FBC CHAPTER 24.
3. SETTING BLOCKS TO BE LOCATED AT 1/4 SPAN LENGTH FOR GLASS WIDER THAN 36" AS PER FBC CHAPTER 24.
4. D.L.O. AND DESIGN PRESSURES MAY NOT EXCEED MAX VALUES SHOWN HEREIN.
5. PRODUCT TESTED WITHOUT GLAZING BEAD.

REILLY ARCHITECTURAL
901 Burman Blvd, Building 701 Calverton, NY 11933
P 631-208-0710 F 631-208-0711 www.reillyarch.com

TITLE: W75 INSWING & OUTSWING CASEMENT WINDOW (WZ3) (IMPACT)

GLAZING DETAILS

PREPARED BY:
BUILDING DROPS, INC.
1900 NE MIAMI COURT, STE. 2-15
MIAMI, FL 33132
PH: (954)399-8478
FAX: (954)744.4738
WEB: www.buildingdrops.com

REMARKS	BY	DATE
2026 FBC UPDATE	LS	06/26

THE INSTALLATION DETAILS DESCRIBED HEREIN ARE GENERIC AND MAY NOT REFLECT ACTUAL CONDITIONS FOR A SPECIFIC SITE. IF SITE CONDITIONS CAUSE INSTALLATION TO DEVIATE FROM THE REQUIREMENTS DETAILED HEREIN, A LICENSED ENGINEER OR ARCHITECT SHALL PREPARE SITE SPECIFIC DOCUMENTS FOR USE WITH THIS DOCUMENT.

HERMES F. NORERO LICENSE No. 73778 STATE OF FLORIDA PROFESSIONAL ENGINEER

HERMES F. NORERO, P.E.
FLORIDA P.E. No. 73778
BUILDING DROPS, INC
1900 NE MIAMI COURT, STE. 2-15
MIAMI, FL 33132
FBPE CERT. OF AUTHORIZATION No. 29578

FL #: FL47694

DATE: 05.21.2025

DWG. BY: JR

CHK. BY: HFN

SCALE: NTS

DWG. #: RWD019

SHEET: 2 OF 25

REV. A

7/9/2026 3:05 PM
c:\users\lucianosanchez\building drops, inc\building drops landing - documents\common\projects\2026 code change projects\reilly architectural\cc-26-0587.1 - 2026 code change\dwgs\fl47694-r0\rwd019.dwg

7/9/2026 3:05 PM
c:\users\lucianosanchez\building drops, inc\building drops landing - documents\common\projects\2026 code change projects\reilly architectural\cc-26-0587.1 - 2026 code change\dwgs\fl47694-r0\rwd019.dwg

1-1/8" O.A. INSULATED LAMINATED GLASS
CONSISTING OF:
1/8" ANNEALED GLASS
0.060" SAFLEX PVB INTERLAYER
1/8" ANNEALED GLASS
1/2" ALUMINUM BOX TUBE SPACER
1/8" ANNEALED GLASS
0.060" SAFLEX PVB INTERLAYER
1/8" ANNEALED GLASS

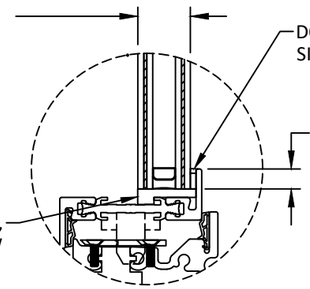

EXTERIOR INTERIOR

GLAZING DETAIL 6

OUTSIDE GLAZED

1-1/4" O.A. INSULATED LAMINATED GLASS
CONSISTING OF:
1/8" ANNEALED GLASS
0.060" SAFLEX PVB INTERLAYER
1/8" ANNEALED GLASS
5/8" ALUMINUM BOX TUBE SPACER
1/8" ANNEALED GLASS
0.060" SAFLEX PVB INTERLAYER
1/8" ANNEALED GLASS

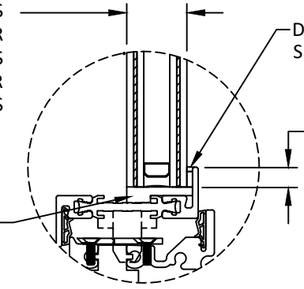

EXTERIOR INTERIOR

GLAZING DETAIL 7

OUTSIDE GLAZED

1-7/16" O.A. INSULATED LAMINATED GLASS
CONSISTING OF:
3/16" TEMPERED GLASS
0.060" SAFLEX PVB INTERLAYER
1/4" TEMPERED GLASS
1/2" ALUMINUM BOX TUBE SPACER
3/16" TEMPERED GLASS
0.060" SAFLEX PVB INTERLAYER
3/16" TEMPERED GLASS

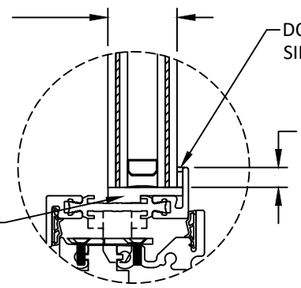

EXTERIOR INTERIOR

GLAZING DETAIL 8

OUTSIDE GLAZED

1-9/16" O.A. INSULATED LAMINATED GLASS
CONSISTING OF:
3/16" TEMPERED GLASS
0.060" SAFLEX PVB INTERLAYER
1/4" TEMPERED GLASS
5/8" ALUMINUM BOX TUBE SPACER
3/16" TEMPERED GLASS
0.060" SAFLEX PVB INTERLAYER
3/16" TEMPERED GLASS

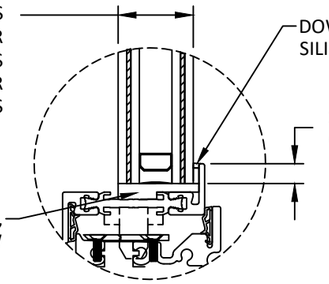

EXTERIOR INTERIOR

GLAZING DETAIL 9

OUTSIDE GLAZED

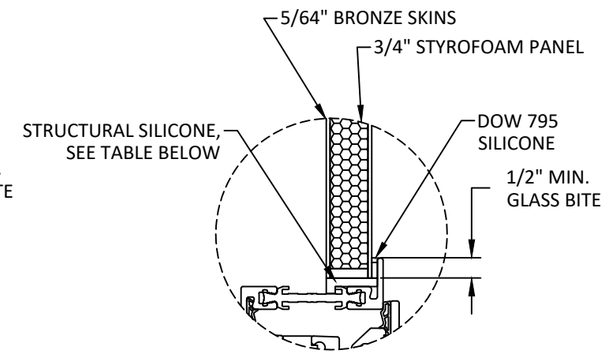

EXTERIOR INTERIOR

GLAZING DETAIL 10

OUTSIDE GLAZED

QUALIFIED SILICONE OPTIONS
DOW 995
DOW 121
SIKA SG-20

GLAZING NOTES:

1. GLASS TYPE COMPLIES WITH ASTM E1300 REQUIREMENTS. PER THE FBC, TEMPER AND SAFETY GLAZING REQUIREMENTS SHALL BE REVIEWED ON A SITE SPECIFIC BASIS.
2. SETTING BLOCK DUROMETER HARDNESS OF 70-90 (SHORE A) AS REFERENCED IN FBC CHAPTER 24.
3. SETTING BLOCKS TO BE LOCATED AT 1/4 SPAN LENGTH FOR GLASS WIDER THAN 36" AS PER FBC CHAPTER 24.
4. D.L.O. AND DESIGN PRESSURES MAY NOT EXCEED MAX VALUES SHOWN HEREIN.
5. PRODUCT TESTED WITHOUT GLAZING BEAD.

REILLY ARCHITECTURAL
901 Burman Blvd, Building 701 Calverton, NY 11933
P 631-208-0710 F 631-208-0711 www.reillyarch.com

TITLE: W75 INSWING & OUTSWING CASEMENT WINDOW (WZ3) (IMPACT)
GLAZING DETAILS

PREPARED BY:
BUILDING DROPS, INC.
1900 NE MIAMI COURT, STE. 2-15
MIAMI, FL 33132
PH: (954)399-8478
FAX: (954)744.4738
WEB: www.buildingdrops.com

REMARKS	BY	DATE
2026 FBC UPDATE	LS	06/26

THE INSTALLATION DETAILS DESCRIBED HEREIN ARE GENERIC AND MAY NOT REFLECT ACTUAL CONDITIONS FOR A SPECIFIC SITE. IF SITE CONDITIONS CAUSE INSTALLATION TO DEVIATE FROM THE REQUIREMENTS DETAILED HEREIN, A LICENSED ENGINEER OR ARCHITECT SHALL PREPARE SITE SPECIFIC DOCUMENTS FOR USE WITH THIS DOCUMENT.

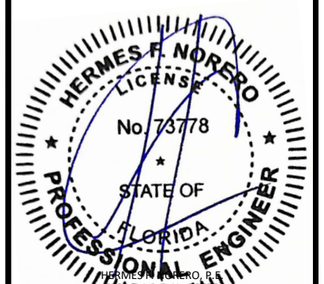

HERMES F. NORERO, P.E.
FLORIDA P.E. No. 73778
BUILDING DROPS, INC
1900 NE MIAMI COURT, STE. 2-15
MIAMI, FL 33132
FBPE CERT. OF AUTHORIZATION No. 29578

FL #: FL47694

DATE: 05.21.2025

DWG. BY: JR | CHK. BY: HFN

SCALE: NTS

DWG. #: RWD019

SHEET: 3 | REV. A

7/9/2026 3:05 PM
c:\users\lucianosanchez\building drops, inc\building drops landing - documents\common\projects\2026 code change projects\reilly architectural\cc-26-0587.1 - 2026 code change\dwgs\fl47694-r0\rwd019.dwg

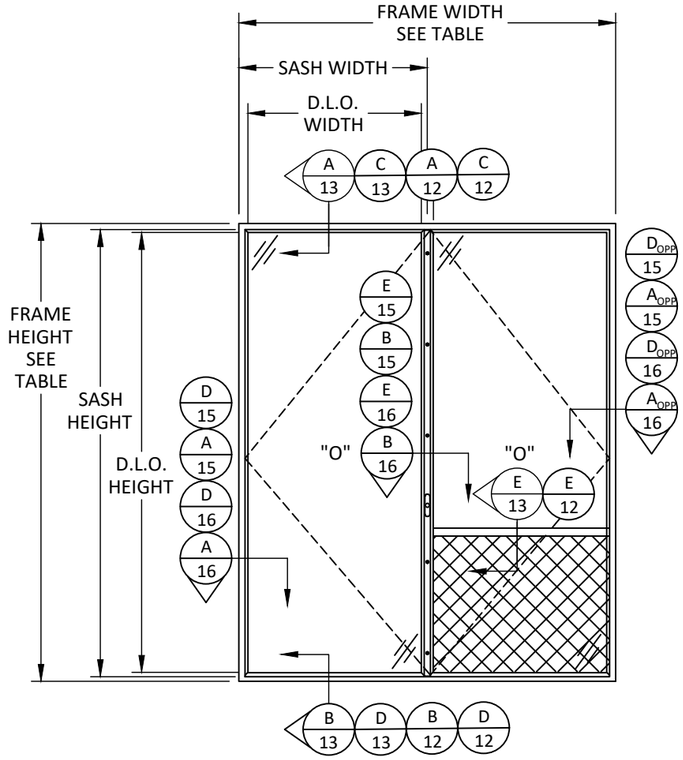

ELEVATION

W75 INSWING & OUTSWING FRENCH CASEMENT WINDOW - WITH MIDRAIL

W75 INSWING & OUTSWING FRENCH CASEMENT WINDOW SIZE NOTES (WITH AND WITHOUT MIDRAIL):
D.L.O. WIDTH = FRAME WIDTH/2 - 3.78"
D.L.O. HEIGHT = FRAME HEIGHT - 5.55"

SASH WIDTH = FRAME WIDTH/2 - 0.47"
SASH HEIGHT = FRAME HEIGHT - 2.25"

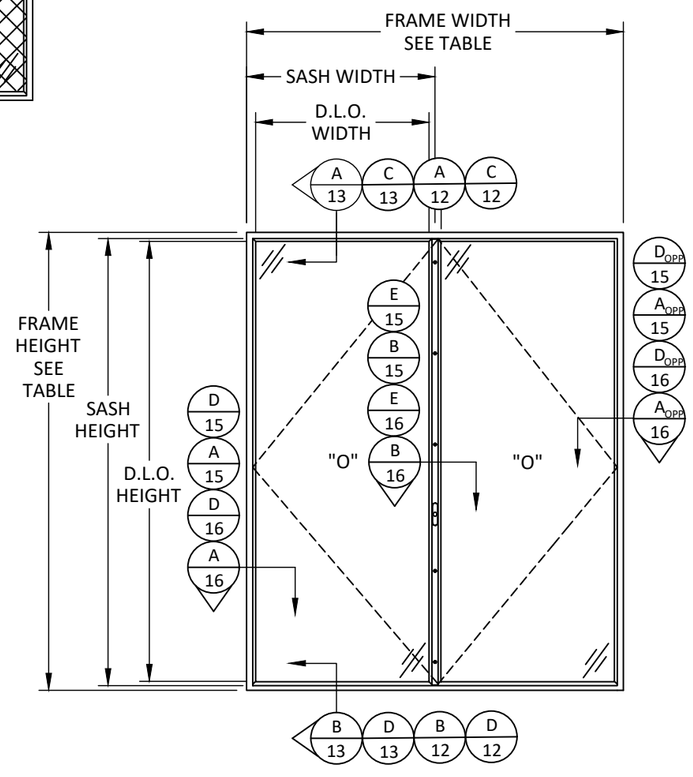

ELEVATION

W75 INSWING & OUTSWING FRENCH CASEMENT WINDOW

W75 FRENCH CASEMENT DESIGN PRESSURE TABLE

DESIGN PRESSURE CHART (PSF)			
FRAME WIDTH (IN.)	FRAME HEIGHT (IN.)	EXT. (+)	INT. (-)
60	60	60.00	60.00
72		60.00	60.00
78		60.00	60.00
90		52.49	52.49
102		46.32	46.32
114		41.44	41.44
60	66	60.00	60.00
72		60.00	60.00
78		60.00	60.00
90		52.49	52.49
102		46.32	46.32
114		41.44	41.44
60	72	60.00	60.00
72		60.00	60.00
78		60.00	60.00
90		52.49	52.49
102		46.32	46.32
60	78	60.00	60.00
72		60.00	60.00
78		60.00	60.00
90		52.49	52.49
60	84	60.00	60.00
72		60.00	60.00
78		60.00	60.00
60	90	60.00	60.00
72		60.00	60.00
78		60.00	60.00
60	96	60.00	60.00
72		60.00	60.00
78		60.00	60.00
60	102	60.00	60.00
72		53.73	53.73
60	108	53.28	53.28
60	114	45.15	45.15
60	120	38.61	38.61
48	126	41.25	41.25
48	132	35.83	35.83

MIDRAIL DESIGN PRESSURE TABLE

DESIGN PRESSURE CHART (PSF)			
TRIBUTARY HEIGHT (IN.)	MIDRAIL SPAN (IN.)	EXT. (+)	INT. (-)
30	18	60.00	60.00
47		60.00	60.00
96		60.00	60.00
30	21	60.00	60.00
47		60.00	60.00
78		60.00	60.00
30	24	60.00	60.00
47		60.00	60.00
72		60.00	60.00
30	27	60.00	60.00
47		60.00	60.00
60		60.00	60.00
30	30	60.00	60.00
47		60.00	60.00
54		60.00	60.00
30	33	60.00	60.00
47		60.00	60.00
30	37	60.00	60.00
47		60.00	60.00
30	39	52.03	52.03
42		48.61	48.61
30	43	37.03	37.03
36		34.01	34.01
30	45	31.71	31.71
36		28.85	28.85
30	49	23.83	23.83
30	51	20.87	20.87

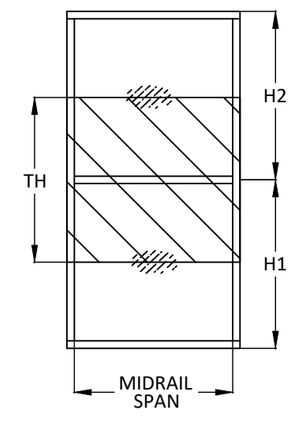

$$\text{TRIBUTARY HEIGHT (TH)} = \frac{H1 + H2}{2}$$

REILLY ARCHITECTURAL
901 Burman Blvd, Building 701 Calverton, NY 11933
P 631-208-0710 F 631-208-0711 www.reillyarch.com

TITLE: W75 INSWING & OUTSWING CASEMENT WINDOW (WZ3) (IMPACT)
ELEVATION & DESIGN PRESSURE TABLE

PREPARED BY:
BUILDING DROPS, INC.
1900 NE MIAMI COURT, STE. 2-15
MIAMI, FL 33132
PH: (954)399-8478
FAX: (954)744.4738
WEB: www.buildingdrops.com

REMARKS	BY	DATE
2026 FBC UPDATE	LS	06/26

THE INSTALLATION DETAILS DESCRIBED HEREIN ARE GENERIC AND MAY NOT REFLECT ACTUAL CONDITIONS FOR A SPECIFIC SITE. IF SITE CONDITIONS CAUSE INSTALLATION TO DEVIATE FROM THE REQUIREMENTS DETAILED HEREIN, A LICENSED ENGINEER OR ARCHITECT SHALL PREPARE SITE SPECIFIC DOCUMENTS FOR USE WITH THIS DOCUMENT.

HERMES F. NORERO LICENSE No. 73778 STATE OF FLORIDA PROFESSIONAL ENGINEER

HERMES F. NORERO, P.E.
FLORIDA P.E. No. 73778
BUILDING DROPS, INC
1900 NE MIAMI COURT, STE. 2-15
MIAMI, FL 33132
FBPE CERT. OF AUTHORIZATION No. 29578

FL #: FL47694

DATE: 05.21.2025

DWG. BY: JR | CHK. BY: HFN

SCALE: NTS

DWG. #: RWD019

SHEET: 4 OF 25 | REV. A

7/9/2026 3:05 PM
c:\users\ludanosanchez\building drops, inc\building drops landing - documents\common\projects\2026 code change projects\reilly architectural\cc-26-0587.1 - 2026 code change\dwgs\fl47694-r0\rwd019.dwg

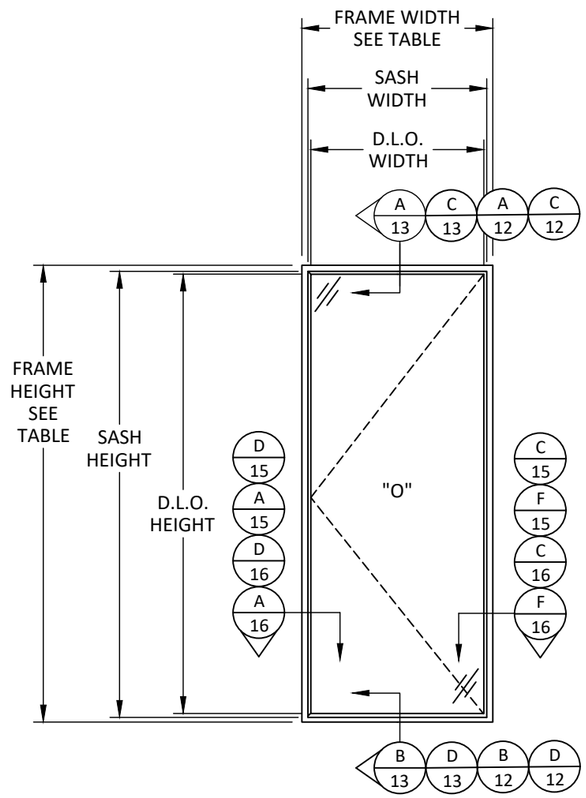

ELEVATION

W75 INSWING & OUTSWING SINGLE CASEMENT WINDOW

W75 INSWING & OUTSWING SINGLE CASEMENT WINDOW SIZE NOTES:
D.L.O. WIDTH = FRAME WIDTH - 3.78"
D.L.O. HEIGHT = FRAME HEIGHT - 5.55"

SASH WIDTH = FRAME WIDTH - 0.47"
SASH HEIGHT = FRAME HEIGHT - 2.25"

W75 SINGLE CASEMENT DESIGN PRESSURE TABLE

DESIGN PRESSURE CHART (PSF)			
FRAME WIDTH (IN.)	FRAME HEIGHT (IN.)	EXT. (+)	INT. (-)
30	60	60.00	60.00
36		60.00	60.00
39		60.00	60.00
45		52.49	52.49
51		46.32	46.32
57		41.44	41.44
30	66	60.00	60.00
36		60.00	60.00
39		60.00	60.00
45		52.49	52.49
51		46.32	46.32
57		41.44	41.44
30	72	60.00	60.00
36		60.00	60.00
39		60.00	60.00
45		52.49	52.49
51		46.32	46.32
30	78	60.00	60.00
36		60.00	60.00
39		60.00	60.00
45		52.49	52.49
30	84	60.00	60.00
36		60.00	60.00
39		60.00	60.00
30	90	60.00	60.00
36		60.00	60.00
39		60.00	60.00
30	96	60.00	60.00
36		60.00	60.00
39		60.00	60.00
30	102	60.00	60.00
36		60.00	60.00
30	108	60.00	60.00
30	114	60.00	60.00
30	120	60.00	60.00
24	126	60.00	60.00
24	132	60.00	60.00

REILLY ARCHITECTURAL
901 Burman Blvd, Building 701 Calverton, NY 11933
P 631-208-0710 F 631-208-0711 www.reillyarch.com

TITLE: W75 INSWING & OUTSWING CASEMENT WINDOW (WZ3) (IMPACT)
ELEVATION & DESIGN PRESSURE TABLE

PREPARED BY:
BUILDING DROPS, INC.
1900 NE MIAMI COURT, STE. 2-15
MIAMI, FL 33132
PH: (954)399-8478
FAX: (954)744.4738
WEB: www.buildingdrops.com

REMARKS	BY	DATE
2026 FBC UPDATE	LS	06/26

THE INSTALLATION DETAILS DESCRIBED HEREIN ARE GENERIC AND MAY NOT REFLECT ACTUAL CONDITIONS FOR A SPECIFIC SITE. IF SITE CONDITIONS CAUSE INSTALLATION TO DEVIATE FROM THE REQUIREMENTS DETAILED HEREIN, A LICENSED ENGINEER OR ARCHITECT SHALL PREPARE SITE SPECIFIC DOCUMENTS FOR USE WITH THIS DOCUMENT.

HERMES F. NORERO LICENSE No. 73778 STATE OF FLORIDA PROFESSIONAL ENGINEER

HERMES F. NORERO, P.E.
FLORIDA LICENSE NO. 73778
BUILDING DROPS, INC
1900 NE MIAMI COURT, STE. 2-15
MIAMI, FL 33132
FBPE CERT. OF AUTHORIZATION No. 29578

FL #: FL47694
DATE: 05.21.2025
DWG. BY: JR
CHK. BY: HFN
SCALE: NTS
DWG. #: RWD019
SHEET: 5 OF 25
REV. A

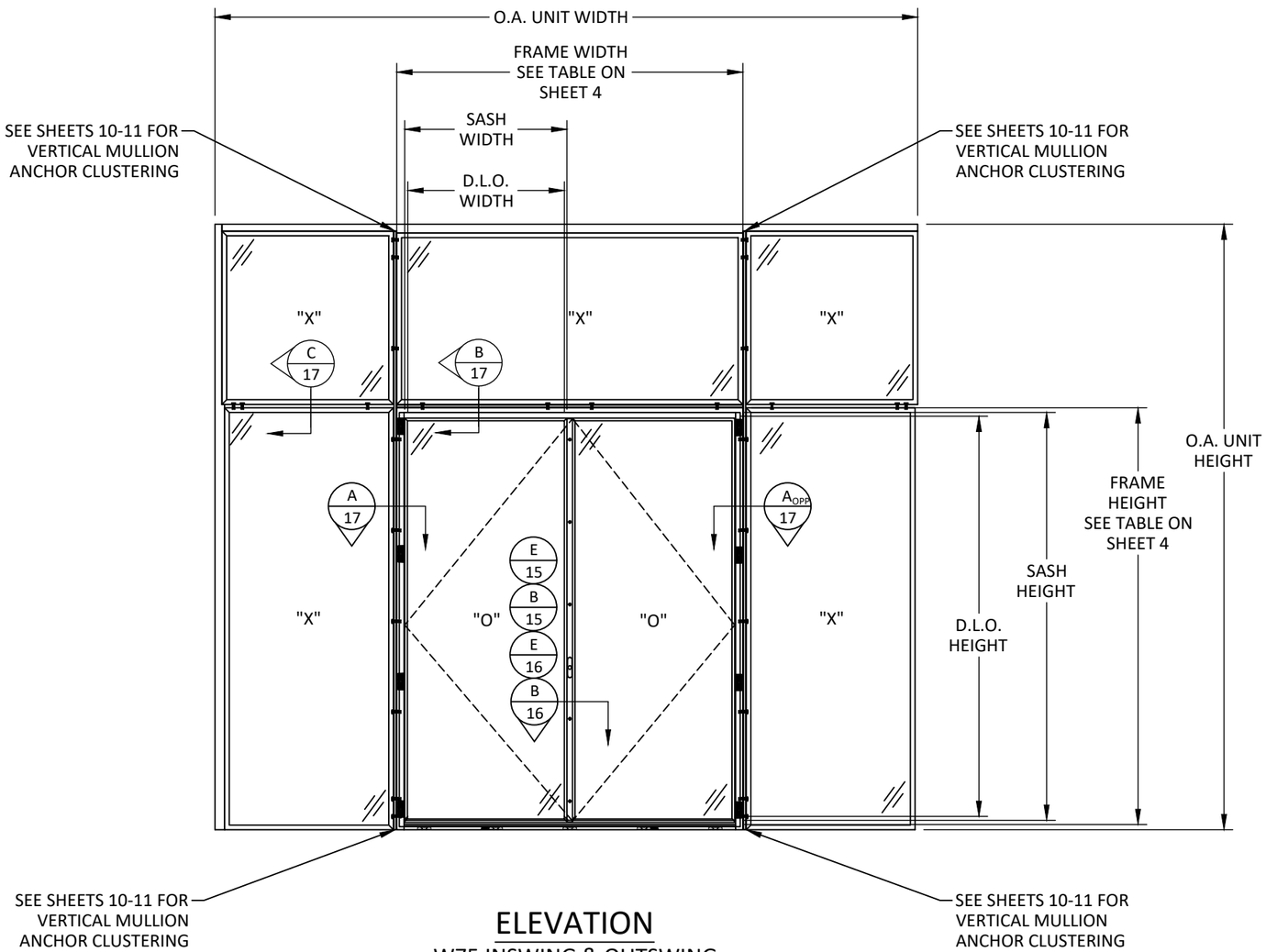

ELEVATION

W75 INSWING & OUTSWING CASEMENT WINDOW WITH SIDELITES AND TRANSOM

NOTE:
SIDELITES AND TRANSOM ARE UNDER THE W75 FLORIDA PRODUCT APPROVAL.

NOTE:
REFER TO SHEET 7 FOR MULLION DESIGN PRESSURE TABLES.

QUALIFIED CONFIGURATIONS

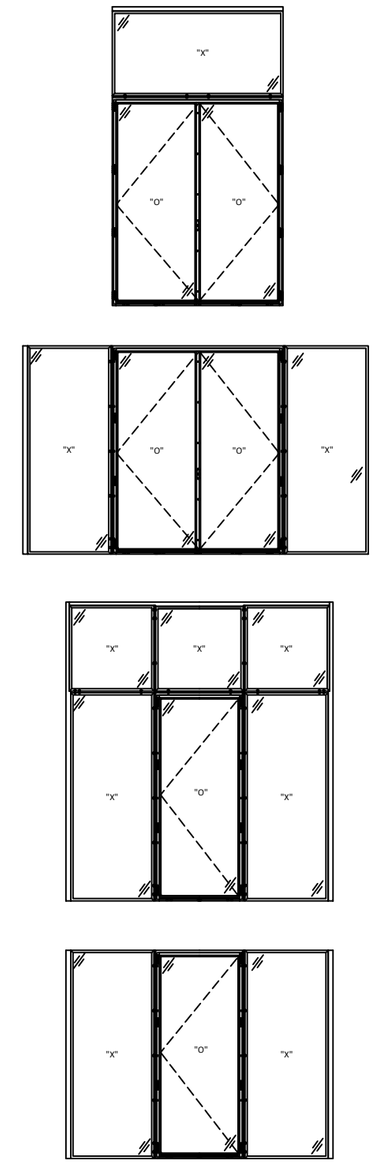

NOTE: ADDITIONAL CONFIGURATIONS QUALIFIED. ASK MANUFACTURER FOR ADDITIONAL INFORMATION.

REILLY ARCHITECTURAL
901 Burman Blvd, Building 701 Calverton, NY 11933
P 631-208-0710 F 631-208-0711 www.reillyarch.com

TITLE: W75 INSWING & OUTSWING CASEMENT WINDOW (WZ3) (IMPACT)

ELEVATION

PREPARED BY:
BUILDING DROPS, INC.
1900 NE MIAMI COURT, STE. 2-15
MIAMI, FL 33132
PH: (954)399-8478
FAX: (954)744.4738
WEB: www.buildingdrops.com

REMARKS	BY	DATE
2026 FBC UPDATE	LS	06/26

THE INSTALLATION DETAILS DESCRIBED HEREIN ARE GENERIC AND MAY NOT REFLECT ACTUAL CONDITIONS FOR A SPECIFIC SITE. IF SITE CONDITIONS CAUSE INSTALLATION TO DEVIATE FROM THE REQUIREMENTS DETAILED HEREIN, A LICENSED ENGINEER OR ARCHITECT SHALL PREPARE SITE SPECIFIC DOCUMENTS FOR USE WITH THIS DOCUMENT.

HERMES F. NORERO LICENSE No. 73778 STATE OF FLORIDA PROFESSIONAL ENGINEER

HERMES F. NORERO P.E.
REGISTERED ENGINEER
BUILDING DROPS, INC
1900 NE MIAMI COURT, STE. 2-15
MIAMI, FL 33132
FBPE CERT. OF AUTHORIZATION No. 29578

FL #: FL47694

DATE: 05.21.2025

DWG. BY: JR | CHK. BY: HFN

SCALE: NTS

DWG. #: RWD019

SHEET: 6 OF 25 | REV. A

7/9/2026 3:05 PM
c:\users\luciano\sanchez\building drops, inc\building drops landing - documents\common\projects\2026 code change projects\reilly architectural\cc-26-0587.1 - 2026 code change\dwgs\fl47694-r0\rwd019.dwg

1/2" X 2-1/2" MULLION

DESIGN PRESSURE CHART (PSF)			
TRIBUTARY WIDTH (IN.)	MULLION SPAN (IN.)	EXT. (+)	INT. (-)
48	60	60.00	60.00
54		60.00	60.00
60		60.00	60.00
68.5		60.00	60.00
72		60.00	60.00
78		60.00	60.00
84		60.00	60.00
48	66	60.00	60.00
54		60.00	60.00
60		60.00	60.00
68.5		60.00	60.00
72		60.00	60.00
78		60.00	60.00
48	72	60.00	60.00
54		60.00	60.00
60		60.00	60.00
68.5		60.00	60.00
72		60.00	60.00
48	78.7	60.00	60.00
54		60.00	60.00
60		60.00	60.00
68.5		60.00	60.00
48	84	58.11	58.11
54		53.62	53.62
60		50.37	50.37
48	90	46.40	46.40
54		42.60	42.60
48	96	37.68	37.68
54		34.45	34.45
48	102	31.04	31.04
48	108	25.89	25.89

NOTE: ONLY QUALIFIED FOR ONE-WAY APPLICATION

TRIBUTARY WIDTH (TW) = $\frac{A + B}{2}$

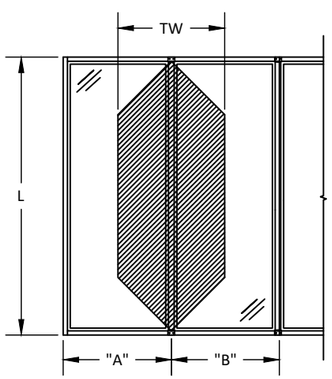

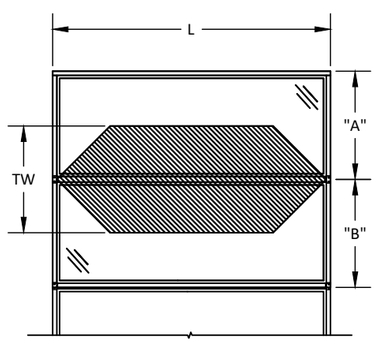

1/2" X 5" MULLION

DESIGN PRESSURE CHART (PSF)			
TRIBUTARY WIDTH (IN.)	MULLION SPAN (IN.)	EXT. (+)	INT. (-)
48	84	60.00	60.00
54		60.00	60.00
59.6		60.00	60.00
66		60.00	60.00
72		60.00	60.00
78		60.00	60.00
84		60.00	60.00
90		60.00	60.00
96		60.00	60.00
48	90	60.00	60.00
54		60.00	60.00
59.6		60.00	60.00
66		60.00	60.00
72		60.00	60.00
78		60.00	60.00
84		60.00	60.00
90		60.00	60.00
48	96	60.00	60.00
54		60.00	60.00
59.6		60.00	60.00
66		60.00	60.00
72		60.00	60.00
78		60.00	60.00
84		60.00	60.00
48	102	60.00	60.00
54		60.00	60.00
59.6		60.00	60.00
66		60.00	60.00
72		60.00	60.00
78		60.00	60.00

DESIGN PRESSURE CHART (PSF)			
TRIBUTARY WIDTH (IN.)	MULLION SPAN (IN.)	EXT. (+)	INT. (-)
48	108	60.00	60.00
54		60.00	60.00
59.6		60.00	60.00
66		60.00	60.00
72		60.00	60.00
48	114	60.00	60.00
54		60.00	60.00
59.6		60.00	60.00
66		60.00	60.00
48	120	60.00	60.00
54		60.00	60.00
59.6		60.00	60.00
66		60.00	60.00
48	126	60.00	60.00
54		60.00	60.00
59.6		60.00	60.00
48	132	60.00	60.00
54		60.00	60.00
59.6		60.00	60.00
48	136.1	60.00	60.00
54		60.00	60.00
59.6		60.00	60.00
48	144	60.00	60.00
54		56.05	56.05
48	150	55.79	55.79
54		49.59	49.59
48	156	49.60	49.60

NOTE: QUALIFIED FOR ONE-WAY AND TWO-WAY APPLICATIONS

TRIBUTARY WIDTH (TW) = $\frac{A + B}{2}$

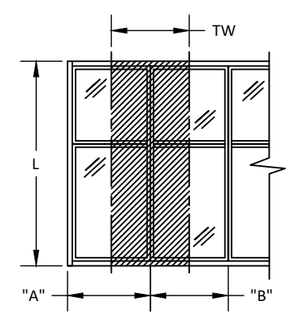

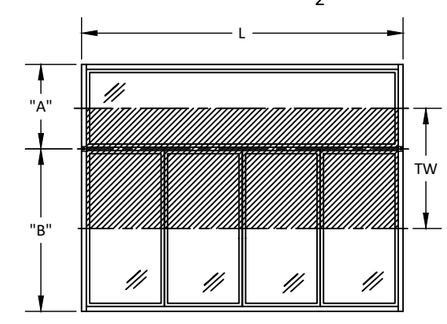

REILLY ARCHITECTURAL
901 Burman Blvd, Building 701 Calverton, NY 11933
P 631-208-0710 F 631-208-0711 www.reillyarch.com

TITLE: W75 INSWING & OUTSWING CASEMENT WINDOW (WZ3) (IMPACT)

MULLION DESIGN PRESSURE TABLES

PREPARED BY:
BUILDING DROPS, INC.
1900 NE MIAMI COURT, STE. 2-15
MIAMI, FL 33132
PH: (954)399-8478
FAX: (954)744.4738
WEB: www.buildingdrops.com

REMARKS	BY	DATE
2026 FBC UPDATE	LS	06/26

THE INSTALLATION DETAILS DESCRIBED HEREIN ARE GENERIC AND MAY NOT REFLECT ACTUAL CONDITIONS FOR A SPECIFIC SITE. IF SITE CONDITIONS CAUSE INSTALLATION TO DEVIATE FROM THE REQUIREMENTS DETAILED HEREIN, A LICENSED ENGINEER OR ARCHITECT SHALL PREPARE SITE SPECIFIC DOCUMENTS FOR USE WITH THIS DOCUMENT.

HERMES F. NORERO LICENSE No. 73778 STATE OF FLORIDA PROFESSIONAL ENGINEER

HERMES F. NORERO, P.E.
FLORIDA P.E. No. 73778
BUILDING DROPS, INC
1900 NE MIAMI COURT, STE. 2-15
MIAMI, FL 33132
FBPE CERT. OF AUTHORIZATION No. 29578

FL #: FL47694

DATE: 05.21.2025

DWG. BY: JR | CHK. BY: HFN

SCALE: NTS

DWG. #: RWD019

SHEET: 7 OF 25 | REV. A

7/9/2026 3:05 PM
c:\users\lucianosanchez\building drops, inc\building drops landing - documents\common\projects\2026 code change projects\reilly architectural\cc-26-0587.1 - 2026 code change\dwgs\fl47694-r0\rwd019.dwg

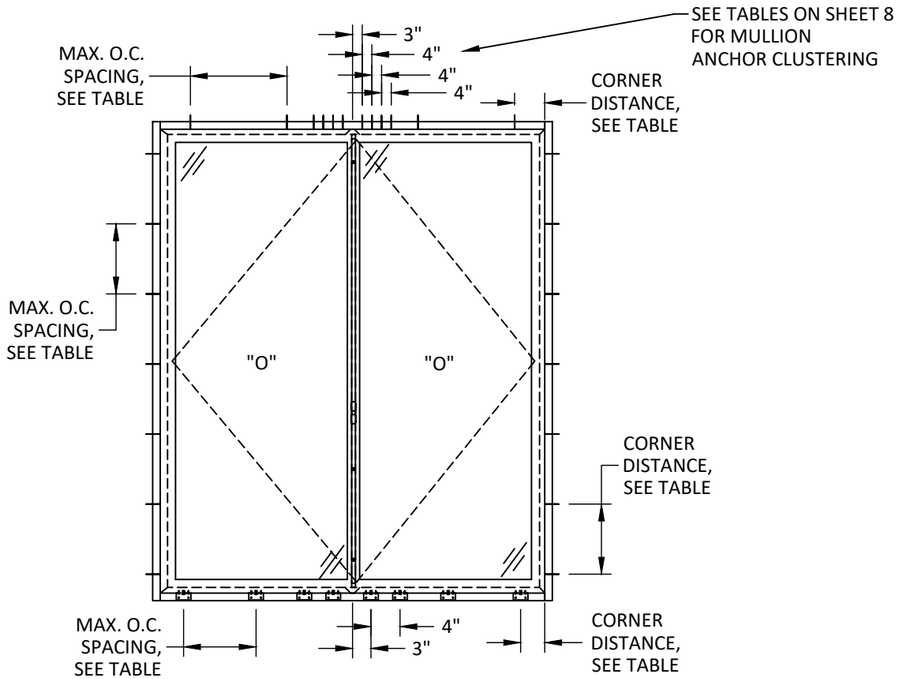

ANCHOR LAYOUT

W75 CASEMENT WINDOW

W75 CASEMENT WINDOW ANCHOR SPACING TABLE - ALTERNATE SILL INSTALLATION OPTIONS

INSTALLATION METHOD	ANCHOR CAPACITY TABLE DESIGNATION	DP (PSF)	ANCHOR	SHIM SPACE	SILL	TOTAL QTY. OF ANCHORS PER MULL ENDS	CORNER DISTANCE
ALUMINUM ANGLE: 1/2" X 1-4/5"	H	+/- 40	#10	1/4"	34-1/2"	2	7"
				1/2"	34-1/2"	4	
		+/- 60	#12	1/4"	34-1/2"	2	
				1/2"	34-1/2"	4	
STEEL ANGLE: 1/2" X 1-4/5"	I	+/- 40	#10	1/2"	34-1/2"	2	7"
		+/- 60	#12	1/4"	34-1/2"	2	
				1/2"	34-1/2"	4	
ALUMINUM ANGLE: 3/4" X 3/4"	J	+/- 40	#10	1/4"	16"	2	6"
				1/2"	16"	4	
		+/- 60	#12	1/4"	16"	2	
				1/2"	16"	4	
STEEL ANGLE: 3/4" X 3/4"	K	+/- 40	#10	1/2"	16"	2	6"
		+/- 60	#12	1/4"	16"	2	
				1/2"	16"	4	

W75 CASEMENT WINDOW ANCHOR SPACING TABLE

INSTALLATION METHOD	ANCHOR CAPACITY TABLE DESIGNATION	DP (PSF)	ANCHOR	SHIM SPACE	HEAD	JAMBS	TOTAL QTY. OF ANCHORS PER MULL ENDS	CORNER DISTANCE
THROUGH FRAME	A	+/- 40	#10	1/4"	18-3/4"	18-3/4"	4	6"
				1/2"	18-3/4"	18-3/4"	8	
		+/- 60	#12	1/4"	18-3/4"	18-3/4"	4	
				1/2"	18-3/4"	18-3/4"	6	
ALUMINUM FLAT CLIP	B	+/- 40	#10	1/4"	29"	29"	2	6"
				1/2"	29"	29"	4	
		+/- 60	#12	1/2"	29"	29"	4	
STEEL FLAT CLIP	C	+/- 40	#10	1/4"	29"	29"	2	6"
				1/2"	29"	29"	4	
		+/- 60	#12	1/4"	29"	29"	2	
				1/2"	29"	29"	4	
ALUMINUM/ STEEL BENT EXTERIOR CLIP	D, E	+/- 40	#10	1/2"	18-3/4"	18-3/4"	2	6"
		+/- 60	#12	1/2"	18-3/4"	18-3/4"	2	
ALUMINUM BENT INTERIOR CLIP	F	+/- 40	#10	1/4"	34-1/2"	29"	2	HEAD/SILL: 7" JAMBS: 4.25"
				1/2"	34-1/2"	29"	4	
		+/- 60	#12	1/4"	34-1/2"	29"	2	
				1/2"	34-1/2"	29"	4	
STEEL BENT INTERIOR CLIP	G	+/- 40	#10	1/2"	34-1/2"	29"	2	HEAD/SILL: 7" JAMBS: 4.25"
		+/- 60	#12	1/4"	34-1/2"	29"	2	
				1/2"	34-1/2"	29"	4	

NOTE: 1/2" SHIM SPACE QUALIFIES 1/4" SHIM SPACE.

REILLY ARCHITECTURAL
901 Burman Blvd, Building 701 Calverton, NY 11933
P 631-208-0710 F 631-208-0711 www.reillyarch.com

TITLE: W75 INSWING & OUTSWING CASEMENT WINDOW (WZ3) (IMPACT)
ANCHOR LAYOUT

PREPARED BY:
BUILDING DROPS, INC.
1900 NE MIAMI COURT, STE. 2-15
MIAMI, FL 33132
PH: (954)399-8478
FAX: (954)744.4738
WEB: www.buildingdrops.com

REMARKS	BY	DATE
2026 FBC UPDATE	LS	06/26

THE INSTALLATION DETAILS DESCRIBED HEREIN ARE GENERIC AND MAY NOT REFLECT ACTUAL CONDITIONS FOR A SPECIFIC SITE. IF SITE CONDITIONS CAUSE INSTALLATION TO DEVIATE FROM THE REQUIREMENTS DETAILED HEREIN, A LICENSED ENGINEER OR ARCHITECT SHALL PREPARE SITE SPECIFIC DOCUMENTS FOR USE WITH THIS DOCUMENT.

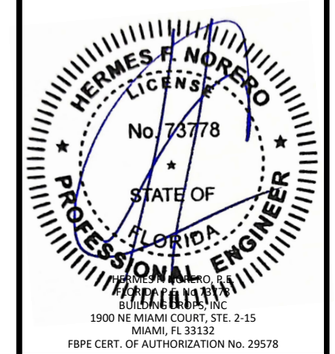

FL #: FL47694

DATE: 05.21.2025

DWG. BY: JR | CHK. BY: HFN

SCALE: NTS

DWG. #: RWD019

SHEET: 8 | REV. A

OF 25

7/9/2026 3:05 PM
c:\users\ludanosanchez\building drops, inc\building drops landing - documents\common\projects\2026 code change projects\reilly architectural\cc-26-0587.1 - 2026 code change\dwgs\fl47694-r0\rwd019.dwg

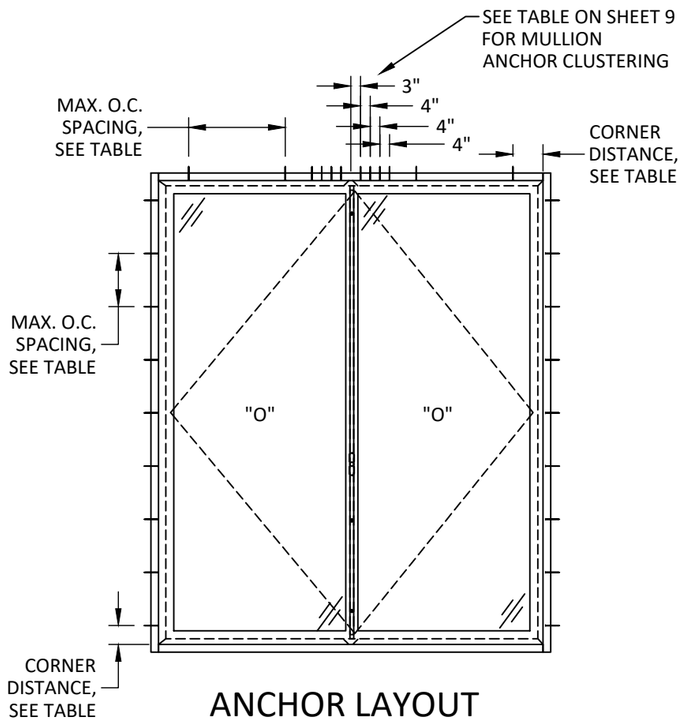

ANCHOR LAYOUT

W75 CASEMENT WINDOW
WITH SILICONE AT SILL

NOTE: 1/2" SHIM SPACE QUALIFIES 1/4" SHIM SPACE.

W75 CASEMENT WINDOW ANCHOR SPACING TABLE

INSTALLATION METHOD	ANCHOR CAPACITY TABLE DESIGNATION	DP (PSF)	ANCHOR	SHIM SPACE	HEAD	JAMBS	TOTAL QTY. OF ANCHORS PER MULL ENDS	CORNER DISTANCE
THROUGH FRAME	A	+/- 40	#10	1/4"	18-3/4"	18-3/4"	4	6"
				1/2"	18-3/4"	8-1/2"	6	
		+/- 60	#12	1/4"	18-3/4"	14"	4	
				1/2"	18-3/4"	10-1/2"	6	
ALUMINUM FLAT CLIP	B	+/- 40	#10	1/4"	29"	29"	2	6"
				1/2"	29"	22-1/2"	4	
		+/- 60	#12	1/4"	29"	29"	2	
				1/2"	29"	18"	4	
STEEL FLAT CLIP	C	+/- 40	#10	1/2"	29"	29"	2	6"
		+/- 60	#12	1/4"	29"	29"	2	
				1/2"	29"	22-1/2"	4	
ALUMINUM/ STEEL BENT EXTERIOR CLIP	D, E	+/- 40	#10	1/2"	18-3/4"	18-3/4"	2	6"
		+/- 60	#12	1/2"	18-3/4"	18-3/4"	2	
ALUMINUM BENT INTERIOR CLIP	F	+/- 40	#10	1/4"	34-1/2"	29"	2	HEAD/SILL: 7" JAMBS: 4.25"
				1/2"	34-1/2"	22"	4	
		+/- 60	#12	1/4"	34-1/2"	29"	2	
				1/2"	34-1/2"	17-1/2"	4	
STEEL BENT INTERIOR CLIP	G	+/- 40	#10	1/4"	34-1/2"	29"	2	HEAD/SILL: 7" JAMBS: 4.25"
				1/2"	34-1/2"	29"	2	
		+/- 60	#12	1/4"	34-1/2"	29"	2	
				1/2"	34-1/2"	21-3/4"	4	

REILLY ARCHITECTURAL
901 Burman Blvd, Building 701 Calverton, NY 11933
P 631-208-0710 F 631-208-0711 www.reillyarch.com

TITLE: W75 INSWING & OUTSWING CASEMENT WINDOW (WZ3) (IMPACT)
ANCHOR LAYOUT

PREPARED BY:
BUILDING DROPS, INC.
1900 NE MIAMI COURT, STE. 2-15
MIAMI, FL 33132
PH: (954)399-8478
FAX: (954)744.4738
WEB: www.buildingdrops.com

REMARKS	BY	DATE
2026 FBC UPDATE	LS	06/26

THE INSTALLATION DETAILS DESCRIBED HEREIN ARE GENERIC AND MAY NOT REFLECT ACTUAL CONDITIONS FOR A SPECIFIC SITE. IF SITE CONDITIONS CAUSE INSTALLATION TO DEVIATE FROM THE REQUIREMENTS DETAILED HEREIN, A LICENSED ENGINEER OR ARCHITECT SHALL PREPARE SITE SPECIFIC DOCUMENTS FOR USE WITH THIS DOCUMENT.

HERMES F. NORERO
LICENSE
No. 73778
STATE OF
FLORIDA
PROFESSIONAL ENGINEER

HERMES F. NORERO, P.E.
FLORIDA P.E. No. 73778
BUILDING DROPS, INC
1900 NE MIAMI COURT, STE. 2-15
MIAMI, FL 33132
FBPE CERT. OF AUTHORIZATION No. 29578

FL #: FL47694

DATE: 05.21.2025

DWG. BY: JR | CHK. BY: HFN

SCALE: NTS

DWG. #: RWD019

SHEET: 9 | REV. A

OF 25

7/9/2026 3:05 PM
c:\users\lucianosanchez\building drops, inc\building drops landing - documents\common\projects\2026 code change projects\reilly architectural\cc-26-0587.1 - 2026 code change\dwgs\fl47694-r0\rwd019.dwg

7/9/2026 3:05 PM
c:\users\lucianosanchez\building drops, inc\building drops landing - documents\common\projects\2026 code change projects\reilly architectural\cc-26-0387.1 - 2026 code change\dwgs\fl47694-r0\rwd019.dwg

ANCHOR CAPACITY TABLE AT MULLION END FOR #10 ANCHORS WITH 1/4" SHIM SPACE

ANCHOR LOAD CAPACITY - PSF EXT. (+) & INT. (-)			
NOMINAL DIMS.		ANCHORS TYPE 'A'	ANCHORS TYPE 'B-K'
TRIBUTARY WIDTH	FRAME HEIGHT	A8	(B-K)8
48	84	40.00	40.00
54		40.00	40.00
59.6		40.00	40.00
66		40.00	40.00
72		40.00	40.00
78		40.00	40.00
84		40.00	40.00
90		40.00	40.00
96		40.00	40.00
48	90	40.00	40.00
54		40.00	40.00
59.6		40.00	40.00
66		40.00	40.00
72		40.00	40.00
78		40.00	40.00
84		40.00	40.00
90		40.00	40.00
48	96	40.00	40.00
54		40.00	40.00
59.6		40.00	40.00
66		40.00	40.00
72		40.00	40.00
78		40.00	40.00
84		40.00	40.00
48	102	40.00	40.00
54		40.00	40.00
59.633		40.00	40.00
66		40.00	40.00
72		40.00	40.00
78		40.00	40.00
48	108	40.00	40.00
54		40.00	40.00
59.6		40.00	40.00
66		40.00	40.00
72		40.00	40.00
48	114	40.00	40.00
54		40.00	40.00
59.6		40.00	40.00
66		40.00	40.00

ANCHOR LOAD CAPACITY - PSF EXT. (+) & INT. (-)			
NOMINAL DIMS.		ANCHORS TYPE 'A'	ANCHORS TYPE 'B-K'
TRIBUTARY WIDTH	FRAME HEIGHT	A8	(B-K)8
48	120	40.00	40.00
54		40.00	40.00
59.6		40.00	40.00
66		40.00	40.00
48	126	40.00	40.00
54		40.00	40.00
59.6		40.00	40.00
48	132	40.00	40.00
54		40.00	40.00
59.6		40.00	40.00
48	136.1	40.00	40.00
54		40.00	40.00
59.6		40.00	40.00
48	144	40.00	40.00
54		40.00	40.00
48	150	40.00	40.00
54		40.00	40.00
48	156	40.00	40.00

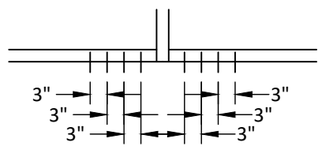

A8, (B-K)8

NOTE: SEE SHEET 6 FOR VERTICAL MULLION.

ANCHOR CAPACITY TABLE AT MULLION END FOR #10 ANCHORS WITH 1/2" SHIM SPACE

ANCHOR LOAD CAPACITY - PSF EXT. (+) & INT. (-)					
NOMINAL DIMS.		ANCHORS TYPE 'A-C, F-K'			ANCHORS TYPE 'D-E'
TRIBUTARY WIDTH	FRAME HEIGHT	(A-C, F-K)8	(A-C, F-K)10	(A-C, F-K)12	(D-E)8
48	84	40.00	40.00	40.00	40.00
54		40.00	40.00	40.00	40.00
59.6		40.00	40.00	40.00	40.00
66		40.00	40.00	40.00	40.00
72		40.00	40.00	40.00	40.00
78		40.00	40.00	40.00	40.00
84		40.00	40.00	40.00	40.00
90		40.00	40.00	40.00	40.00
96		40.00	40.00	40.00	40.00
48	90	40.00	40.00	40.00	40.00
54		40.00	40.00	40.00	40.00
59.6		40.00	40.00	40.00	40.00
66		40.00	40.00	40.00	40.00
72		40.00	40.00	40.00	40.00
78		40.00	40.00	40.00	40.00
84		40.00	40.00	40.00	40.00
90		40.00	40.00	40.00	40.00
48	96	40.00	40.00	40.00	40.00
54		40.00	40.00	40.00	40.00
59.6		40.00	40.00	40.00	40.00
66		39.54	40.00	40.00	40.00
72		38.06	40.00	40.00	40.00
78		36.98	40.00	40.00	40.00
84		36.25	40.00	40.00	40.00
48	102	40.00	40.00	40.00	40.00
54		40.00	40.00	40.00	40.00
59.6		38.21	40.00	40.00	40.00
66		36.10	40.00	40.00	40.00
72		34.60	40.00	40.00	40.00
78		33.46	40.00	40.00	40.00
48	108	40.00	40.00	40.00	40.00
54		37.59	40.00	40.00	40.00
59.6		35.28	40.00	40.00	40.00
66		33.22	40.00	40.00	40.00
72		31.72	39.65	40.00	40.00
48	114	38.06	40.00	40.00	40.00
54		35.00	40.00	40.00	40.00
59.6		32.76	40.00	40.00	40.00
66		30.76	38.44	40.00	40.00

NOTE: SEE SHEET 6 FOR VERTICAL MULLION.

ANCHOR LOAD CAPACITY - PSF EXT. (+) & INT. (-)					
NOMINAL DIMS.		ANCHORS TYPE 'A-C, F-I'			ANCHORS TYPE 'D-E'
TRIBUTARY WIDTH	FRAME HEIGHT	(A-C, F-K)8	(A-C, F-K)10	(A-C, F-K)12	(D-E)8
48	120	35.68	40.00	40.00	40.00
54		32.74	40.00	40.00	40.00
59.6		30.58	38.23	40.00	40.00
66		28.63	35.79	40.00	40.00
48	126	33.58	40.00	40.00	40.00
54		30.76	38.44	40.00	40.00
59.6		28.68	35.85	40.00	40.00
48	132	31.72	39.65	40.00	40.00
54		29.00	36.25	40.00	40.00
59.6		26.99	33.74	40.00	40.00
48	136.1	30.56	38.20	40.00	40.00
54		27.91	34.89	40.00	40.00
59.6		25.95	32.44	40.00	40.00
48	144	28.54	35.68	40.00	40.00
54		26.02	32.53	40.00	40.00
48	150	27.19	33.98	40.00	40.00
54		24.75	30.94	40.00	40.00
48	156	25.95	32.44	40.00	40.00

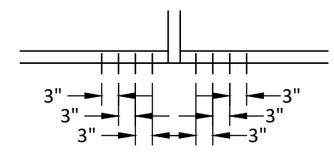

(A-C, F-K)8, (D-E)8

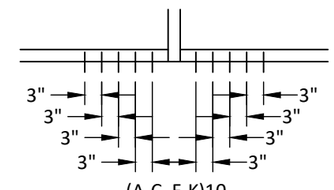

(A-C, F-K)10

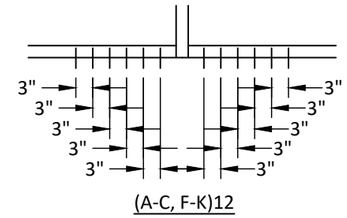

(A-C, F-K)12

REILLY ARCHITECTURAL
901 Burman Blvd, Building 701 Calverton, NY 11933
P 631-208-0710 F 631-208-0711 www.reillyarch.com

TITLE: W75 INSWING & OUTSWING CASEMENT WINDOW (WZ3) (IMPACT)

ANCHOR CAPACITY TABLES

PREPARED BY:
BUILDING DROPS, INC.
1900 NE MIAMI COURT, STE. 2-15
MIAMI, FL 33132
PH: (954)399-8478
FAX: (954)744.4738
WEB: www.buildingdrops.com

REMARKS	BY	DATE
2026 FBC UPDATE	LS	06/26

THE INSTALLATION DETAILS DESCRIBED HEREIN ARE GENERIC AND MAY NOT REFLECT ACTUAL CONDITIONS FOR A SPECIFIC SITE. IF SITE CONDITIONS CAUSE INSTALLATION TO DEVIATE FROM THE REQUIREMENTS DETAILED HEREIN, A LICENSED ENGINEER OR ARCHITECT SHALL PREPARE SITE SPECIFIC DOCUMENTS FOR USE WITH THIS DOCUMENT.

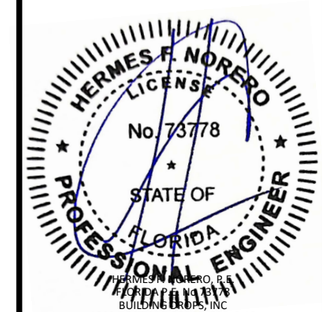

HERMES F. NORERO, P.E.
FLORIDA P.E. No. 73778
BUILDING DROPS, INC
1900 NE MIAMI COURT, STE. 2-15
MIAMI, FL 33132
FBPE CERT. OF AUTHORIZATION No. 29578

FL #: FL47694

DATE: 05.21.2025

DWG. BY: JR | CHK. BY: HFN

SCALE: NTS

DWG. #: RWD019

SHEET: 10 | REV. A

ANCHOR CAPACITY TABLE AT MULLION END FOR #12 ANCHORS WITH 1/4" SHIM SPACE

ANCHOR LOAD CAPACITY - PSF EXT. (+) & INT. (-)				
NOMINAL DIMS.		ANCHORS TYPE 'A'		ANCHORS TYPE 'B-K'
TRIBUTARY WIDTH	FRAME HEIGHT	A8	A10	(B-K)8
48	84	60.00	60.00	60.00
54		60.00	60.00	60.00
59.6		60.00	60.00	60.00
66		60.00	60.00	60.00
72		60.00	60.00	60.00
78		60.00	60.00	60.00
84		60.00	60.00	60.00
90		60.00	60.00	60.00
96		60.00	60.00	60.00
48	90	60.00	60.00	60.00
54		60.00	60.00	60.00
59.6		60.00	60.00	60.00
66		60.00	60.00	60.00
72		60.00	60.00	60.00
78		60.00	60.00	60.00
84		60.00	60.00	60.00
90		60.00	60.00	60.00
48	96	60.00	60.00	60.00
54		60.00	60.00	60.00
59.6		60.00	60.00	60.00
66		60.00	60.00	60.00
72		60.00	60.00	60.00
78		60.00	60.00	60.00
84		60.00	60.00	60.00
48	102	60.00	60.00	60.00
54		60.00	60.00	60.00
59.6		60.00	60.00	60.00
66		60.00	60.00	60.00
72		60.00	60.00	60.00
78		60.00	60.00	60.00
48	108	60.00	60.00	60.00
54		60.00	60.00	60.00
59.6		60.00	60.00	60.00
66		60.00	60.00	60.00
72		60.00	60.00	60.00
48	114	60.00	60.00	60.00
54		60.00	60.00	60.00
59.6		60.00	60.00	60.00
66		60.00	60.00	60.00
48	120	60.00	60.00	60.00
54		60.00	60.00	60.00
59.6		60.00	60.00	60.00
66		60.00	60.00	60.00

ANCHOR LOAD CAPACITY - PSF EXT. (+) & INT. (-)				
NOMINAL DIMS.		ANCHORS TYPE 'A'		ANCHORS TYPE 'B-K'
TRIBUTARY WIDTH	FRAME HEIGHT	A8	A10	(B-K)8
48	126	60.00	60.00	60.00
54		60.00	60.00	60.00
59.6		60.00	60.00	60.00
48	132	60.00	60.00	60.00
54		60.00	60.00	60.00
59.6		60.00	60.00	60.00
48	136.1	60.00	60.00	60.00
54		60.00	60.00	60.00
59.6		60.00	60.00	60.00
48	144	60.00	60.00	60.00
54		60.00	60.00	60.00
48	150	60.00	60.00	60.00
54		58.97	60.00	60.00
48	156	60.00	60.00	60.00

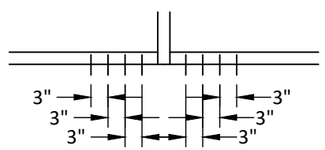

A8, (B-K)8

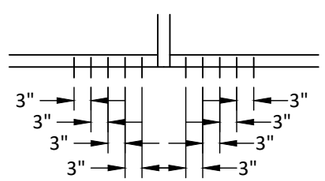

A10

NOTE: SEE SHEET 6 FOR VERTICAL MULLION.

ANCHOR CAPACITY TABLE AT MULLION END FOR #12 ANCHORS WITH 1/2" SHIM SPACE

ANCHOR LOAD CAPACITY - PSF EXT. (+) & INT. (-)						
NOMINAL DIMS.		ANCHORS TYPE 'A'			ANCHORS TYPE 'B-C'	ANCHORS TYPE 'D-K'
TRIBUTARY WIDTH	FRAME HEIGHT	A8	A10	A12	(B-C)8	(D-K)8
48	84	60.00	60.00	60.00	60.00	60.00
54		60.00	60.00	60.00	60.00	60.00
59.6		60.00	60.00	60.00	60.00	60.00
66		60.00	60.00	60.00	60.00	60.00
72		60.00	60.00	60.00	60.00	60.00
78		60.00	60.00	60.00	60.00	60.00
84		60.00	60.00	60.00	60.00	60.00
90		60.00	60.00	60.00	60.00	60.00
96		60.00	60.00	60.00	60.00	60.00
48	90	60.00	60.00	60.00	60.00	60.00
54		60.00	60.00	60.00	60.00	60.00
59.6		60.00	60.00	60.00	60.00	60.00
66		60.00	60.00	60.00	60.00	60.00
72		60.00	60.00	60.00	60.00	60.00
78		60.00	60.00	60.00	60.00	60.00
84		60.00	60.00	60.00	60.00	60.00
90		60.00	60.00	60.00	60.00	60.00
48	96	60.00	60.00	60.00	60.00	60.00
54		60.00	60.00	60.00	60.00	60.00
59.6		60.00	60.00	60.00	60.00	60.00
66		60.00	60.00	60.00	60.00	60.00
72		60.00	60.00	60.00	60.00	60.00
78		60.00	60.00	60.00	60.00	60.00
84		60.00	60.00	60.00	60.00	60.00
48	102	60.00	60.00	60.00	60.00	60.00
54		60.00	60.00	60.00	60.00	60.00
59.6		60.00	60.00	60.00	60.00	60.00
66		60.00	60.00	60.00	60.00	60.00
72		60.00	60.00	60.00	60.00	60.00
78		60.00	60.00	60.00	60.00	60.00
48	108	60.00	60.00	60.00	60.00	60.00
54		60.00	60.00	60.00	60.00	60.00
59.6		60.00	60.00	60.00	60.00	60.00
66		60.00	60.00	60.00	60.00	60.00
72		59.70	60.00	60.00	60.00	60.00
48	114	60.00	60.00	60.00	60.00	60.00
54		60.00	60.00	60.00	60.00	60.00
59.6		60.00	60.00	60.00	60.00	60.00
66		57.89	60.00	60.00	60.00	60.00
48	120	60.00	60.00	60.00	60.00	60.00
54		60.00	60.00	60.00	60.00	60.00
59.6		57.56	60.00	60.00	60.00	60.00
66		53.89	60.00	60.00	60.00	60.00

ANCHOR LOAD CAPACITY - PSF EXT. (+) & INT. (-)						
NOMINAL DIMS.		ANCHORS TYPE 'A'			ANCHORS TYPE 'B-C'	ANCHORS TYPE 'D-K'
TRIBUTARY WIDTH	FRAME HEIGHT	A8	A10	A12	(B-C)8	(D-K)8
48	126	60.00	60.00	60.00	60.00	60.00
54		57.89	60.00	60.00	60.00	60.00
59.6		53.97	60.00	60.00	60.00	60.00
48	132	59.70	60.00	60.00	60.00	60.00
54		54.58	60.00	60.00	60.00	60.00
59.6		50.81	60.00	60.00	60.00	60.00
48	136.1	57.51	60.00	60.00	60.00	60.00
54		52.53	60.00	60.00	60.00	60.00
59.6		48.85	60.00	60.00	60.00	60.00
48	144	53.73	60.00	60.00	60.00	60.00
54		48.98	60.00	60.00	60.00	60.00
48	150	51.17	60.00	60.00	60.00	60.00
54		46.59	58.24	60.00	60.00	60.00
48	156	48.84	60.00	60.00	60.00	60.00

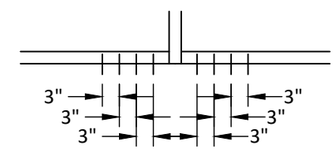

A8, (B-C)8, (D-K)8

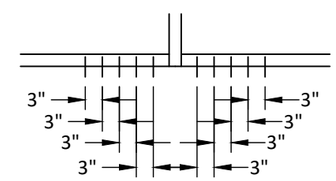

A10

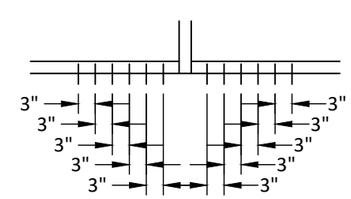

A12

NOTE: SEE SHEET 6 FOR VERTICAL MULLION.

REILLY ARCHITECTURAL
901 Burman Blvd, Building 701 Calverton, NY 11933
P 631-208-0710 F 631-208-0711 www.reillyarch.com

TITLE: W75 INSWING & OUTSWING CASEMENT WINDOW (WZ3) (IMPACT)

ANCHOR CAPACITY TABLES

PREPARED BY:
BUILDING DROPS, INC.
1900 NE MIAMI COURT, STE. 2-15
MIAMI, FL 33132
PH: (954)399-8478
FAX: (954)744.4738
WEB: www.buildingdrops.com

REMARKS	BY	DATE
2026 FBC UPDATE	LS	06/26

THE INSTALLATION DETAILS DESCRIBED HEREIN ARE GENERIC AND MAY NOT REFLECT ACTUAL CONDITIONS FOR A SPECIFIC SITE. IF SITE CONDITIONS CAUSE INSTALLATION TO DEVIATE FROM THE REQUIREMENTS DETAILED HEREIN, A LICENSED ENGINEER OR ARCHITECT SHALL PREPARE SITE SPECIFIC DOCUMENTS FOR USE WITH THIS DOCUMENT.

HERMES F. NORERO LICENSE No. 73778 STATE OF FLORIDA PROFESSIONAL ENGINEER

HERMES F. NORERO, P.E.
LICENSE No. 73778
BUILDING DROPS, INC
1900 NE MIAMI COURT, STE. 2-15
MIAMI, FL 33132
FBPE CERT. OF AUTHORIZATION No. 29578

FL #: FL47694

DATE: 05.21.2025

DWG. BY: JR | CHK. BY: HFN

SCALE: NTS

DWG. #: RWD019

SHEET: 11 OF 25 | REV. A

7/9/2026 3:05 PM
c:\users\lucianosanchez\building drops, inc\building drops landing - documents\common\projects\2026 code change projects\reilly architectural\cc-26-0587.1 - 2026 code change\dwgs\fl47694-r0\rwd019.dwg

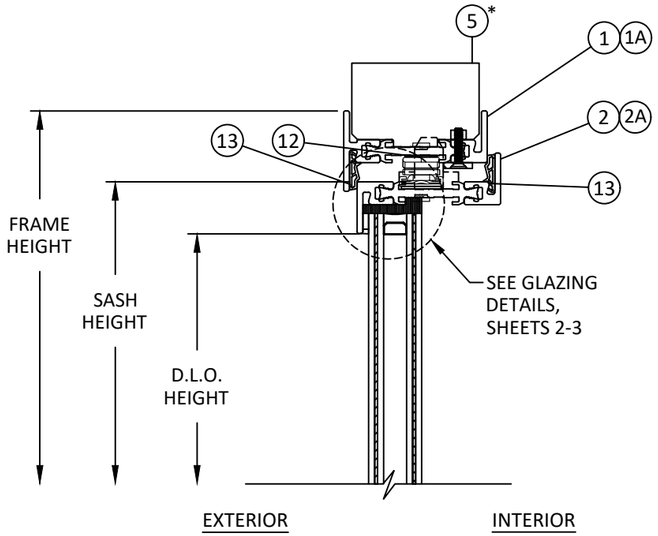

A 12 VERTICAL SECTION
INSIDE GLAZED - HEAD
INSWING CASEMENT

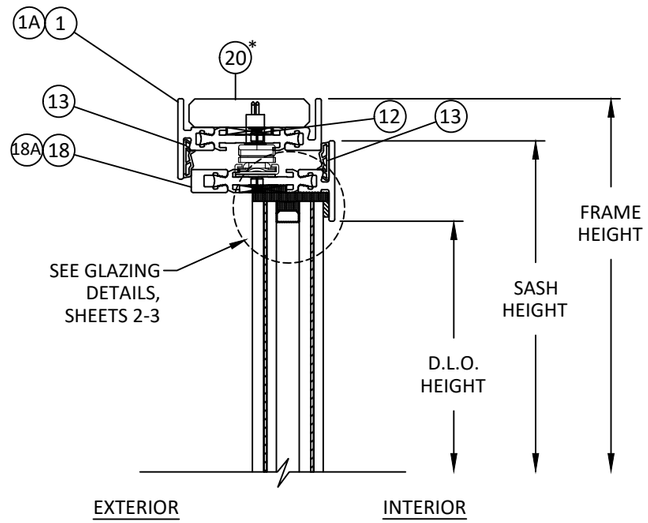

C 12 VERTICAL SECTION
OUTSIDE GLAZED - HEAD
INSWING CASEMENT

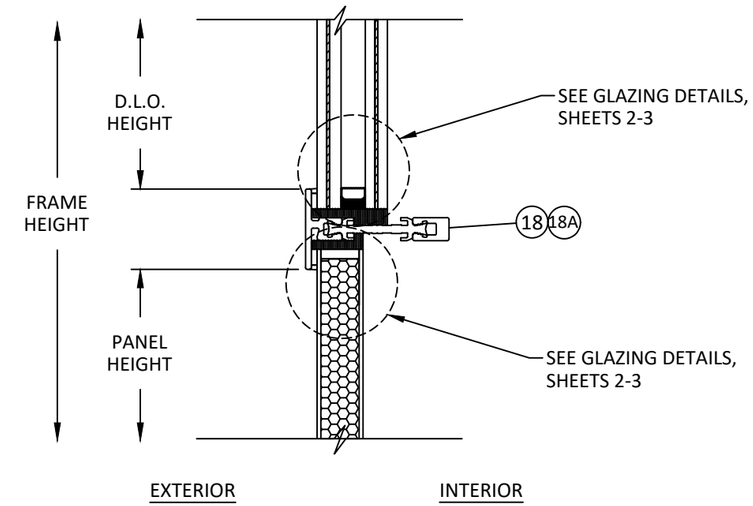

E 12 VERTICAL SECTION
INSIDE GLAZED - MIDRAIL

*NOTE: BLOCKING DEPENDENT ON INSTALLATION. REFER TO SHEETS 23-25 FOR MORE DETAILS.

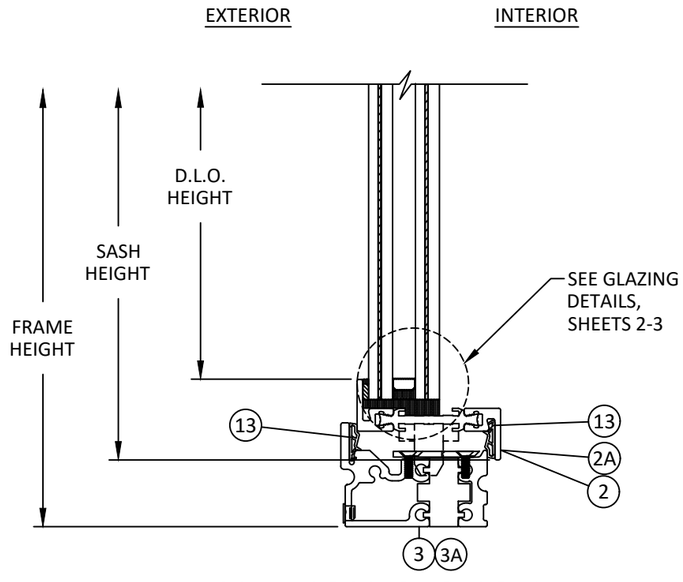

B 12 VERTICAL SECTION
INSIDE GLAZED - SILL
INSWING CASEMENT

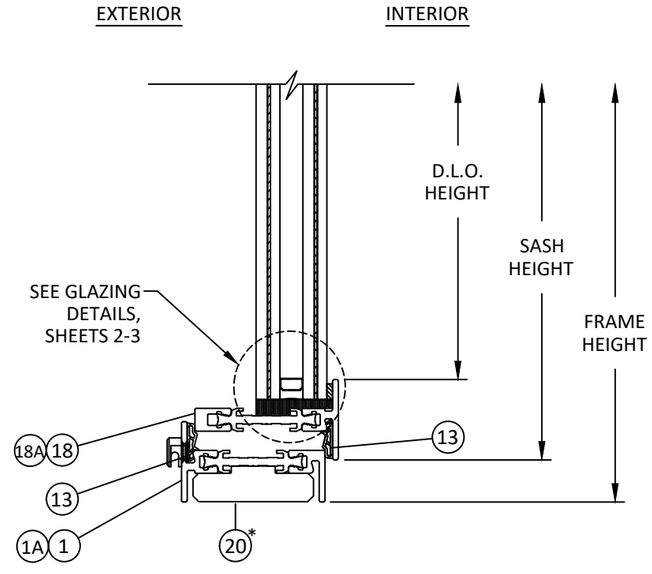

D 12 VERTICAL SECTION
OUTSIDE GLAZED - SILL
INSWING CASEMENT

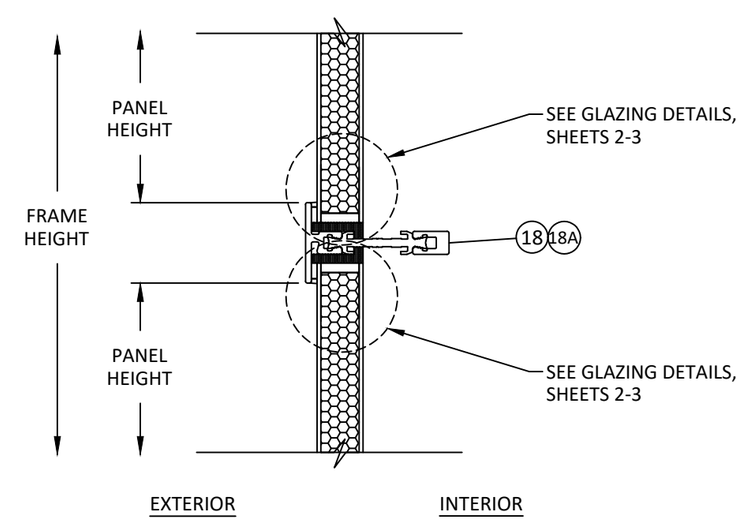

F 12 VERTICAL SECTION
INSIDE GLAZED - MIDRAIL

REILLY ARCHITECTURAL
901 Burman Blvd, Building 701 Calverton, NY 11933
P 631-208-0710 F 631-208-0711 www.reillyarch.com

TITLE: W75 INSWING & OUTSWING CASEMENT WINDOW (WZ3) (IMPACT)
VERTICAL SECTIONS

PREPARED BY:
BUILDING DROPS, INC.
1900 NE MIAMI COURT, STE. 2-15
MIAMI, FL 33132
PH: (954)399-8478
FAX: (954)744.4738
WEB: www.buildingdrops.com

REMARKS	BY	DATE
2026 FBC UPDATE	LS	06/26

THE INSTALLATION DETAILS DESCRIBED HEREIN ARE GENERIC AND MAY NOT REFLECT ACTUAL CONDITIONS FOR A SPECIFIC SITE. IF SITE CONDITIONS CAUSE INSTALLATION TO DEVIATE FROM THE REQUIREMENTS DETAILED HEREIN, A LICENSED ENGINEER OR ARCHITECT SHALL PREPARE SITE SPECIFIC DOCUMENTS FOR USE WITH THIS DOCUMENT.

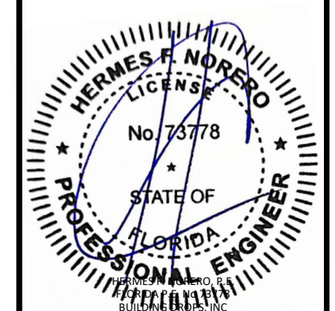

HERMES F. NORERO, P.E.
FLORIDA P.E. No. 73778
BUILDING DROPS, INC
1900 NE MIAMI COURT, STE. 2-15
MIAMI, FL 33132
FBPE CERT. OF AUTHORIZATION No. 29578

FL #: FL47694

DATE: 05.21.2025

DWG. BY: JR | CHK. BY: HFN

SCALE: NTS

DWG. #: RWD019

SHEET: 12 OF 25 | REV. A

7/9/2026 3:05 PM
c:\users\lucianosanchez\building drops, inc\building drops landing - documents\common\projects\2026 code change projects\reilly architectural\cc-26-0587.1 - 2026 code change\dwgs\fl47694-r0\rwd019.dwg

7/9/2026 3:05 PM
c:\users\lucianosanchez\building drops, inc\building drops landing - documents\common\projects\2026 code change projects\reilly architectural\cc-26-0587.1 - 2026 code change\dwgs\fl47694-r0\rwd019.dwg

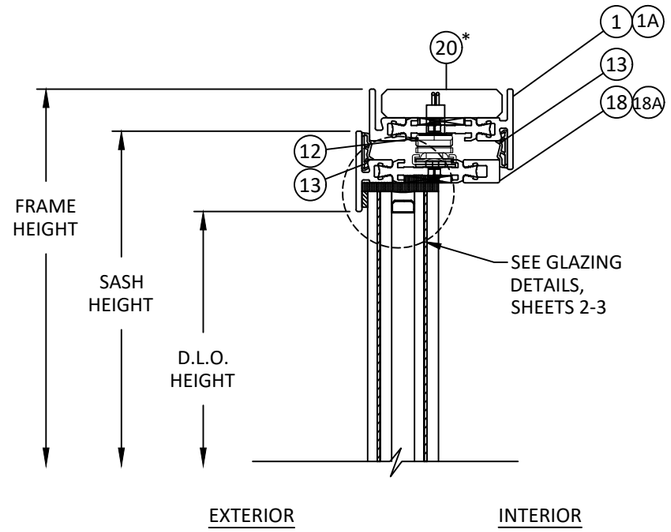

A 13 VERTICAL SECTION
INSIDE GLAZED - HEAD OUTSWING CASEMENT

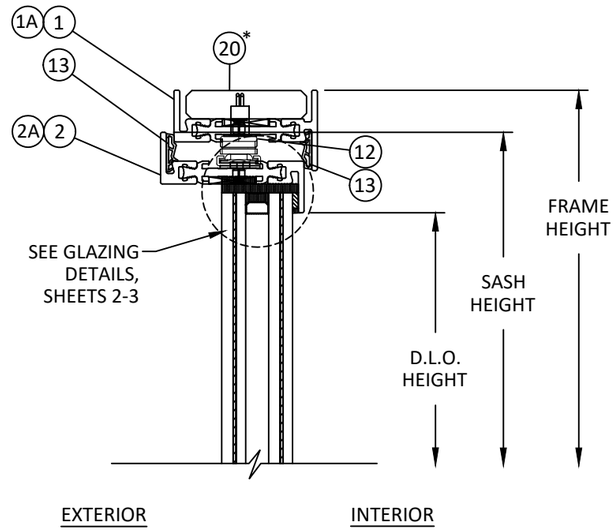

C 13 VERTICAL SECTION
OUTSIDE GLAZED - HEAD OUTSWING CASEMENT

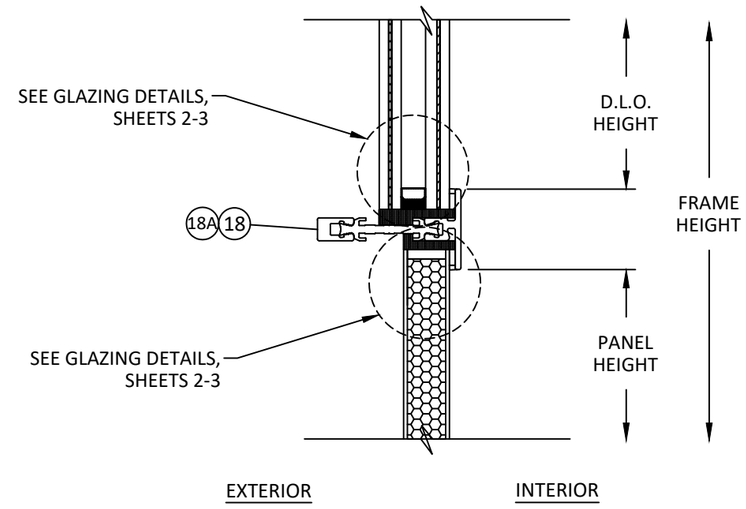

E 13 VERTICAL SECTION
OUTSIDE GLAZED - MIDRAIL

*NOTE: BLOCKING DEPENDENT ON INSTALLATION. REFER TO SHEETS 23-25 FOR MORE DETAILS.

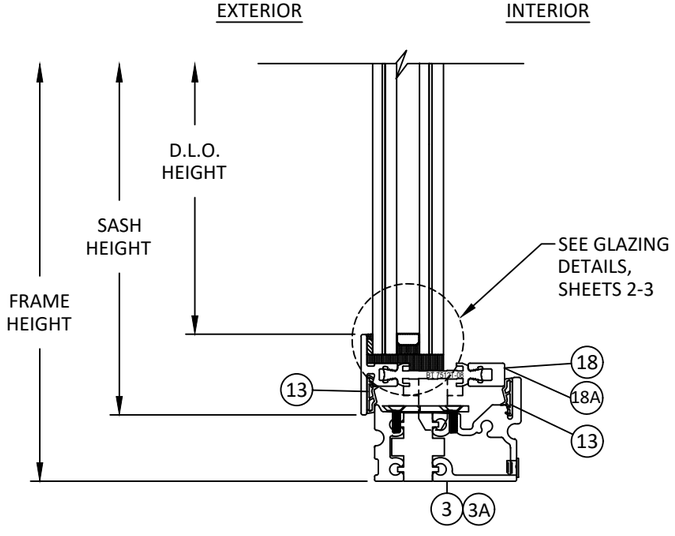

B 13 VERTICAL SECTION
INSIDE GLAZED - SILL OUTSWING CASEMENT

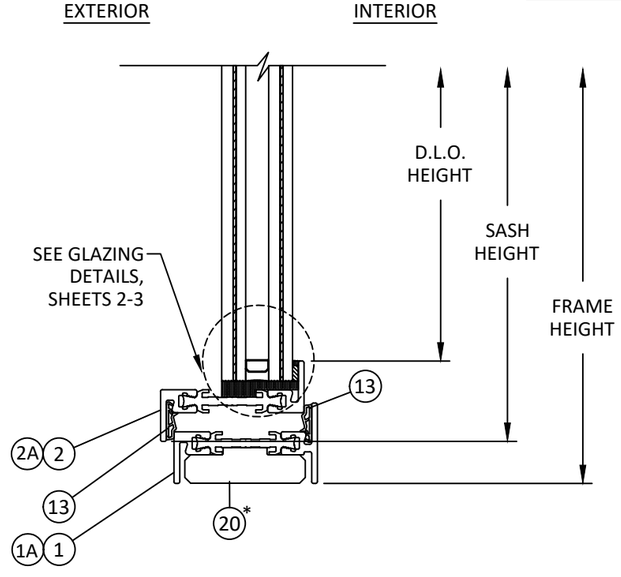

D 13 VERTICAL SECTION
OUTSIDE GLAZED - SILL OUTSWING CASEMENT

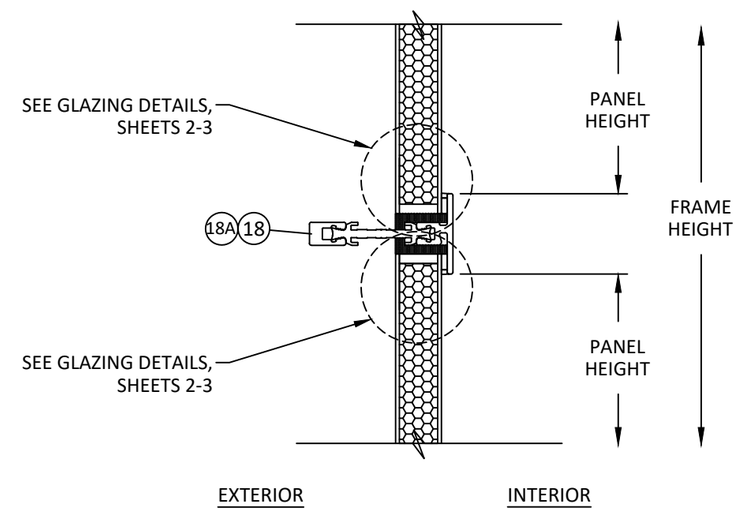

F 13 VERTICAL SECTION
OUTSIDE GLAZED - MIDRAIL

REILLY ARCHITECTURAL
901 Burman Blvd, Building 701 Calverton, NY 11933
P 631-208-0710 F 631-208-0711 www.reillyarch.com

TITLE: W75 INSWING & OUTSWING CASEMENT WINDOW (WZ3) (IMPACT)
VERTICAL SECTIONS

PREPARED BY:
BUILDING DROPS, INC.
1900 NE MIAMI COURT, STE. 2-15
MIAMI, FL 33132
PH: (954)399-8478
FAX: (954)744.4738
WEB: www.buildingdrops.com

REMARKS	BY	DATE
2026 FBC UPDATE	LS	06/26

THE INSTALLATION DETAILS DESCRIBED HEREIN ARE GENERIC AND MAY NOT REFLECT ACTUAL CONDITIONS FOR A SPECIFIC SITE. IF SITE CONDITIONS CAUSE INSTALLATION TO DEVIATE FROM THE REQUIREMENTS DETAILED HEREIN, A LICENSED ENGINEER OR ARCHITECT SHALL PREPARE SITE SPECIFIC DOCUMENTS FOR USE WITH THIS DOCUMENT.

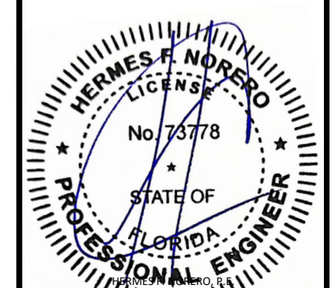

HERMES F. NORERO, P.E.
FLORIDA P.E. No. 73778
BUILDING DROPS, INC
1900 NE MIAMI COURT, STE. 2-15
MIAMI, FL 33132
FBPE CERT. OF AUTHORIZATION No. 29578

FL #: FL47694

DATE: 05.21.2025

DWG. BY: JR | CHK. BY: HFN

SCALE: NTS

DWG. #: RWD019

SHEET: 13 OF 25 | REV. A

7/9/2026 3:05 PM
c:\users\ludanosanchez\building drops, inc\building drops landing - documents\common\projects\2026 code change projects\reilly architectural\cc-26-0587.1 - 2026 code change\dwgs\fl47694-r0\rwd019.dwg

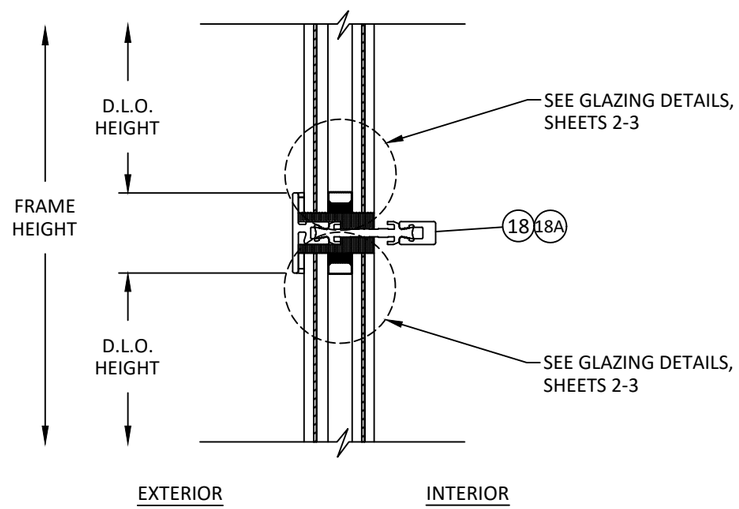

A
14

VERTICAL SECTION

INSIDE GLAZED - MIDRAIL

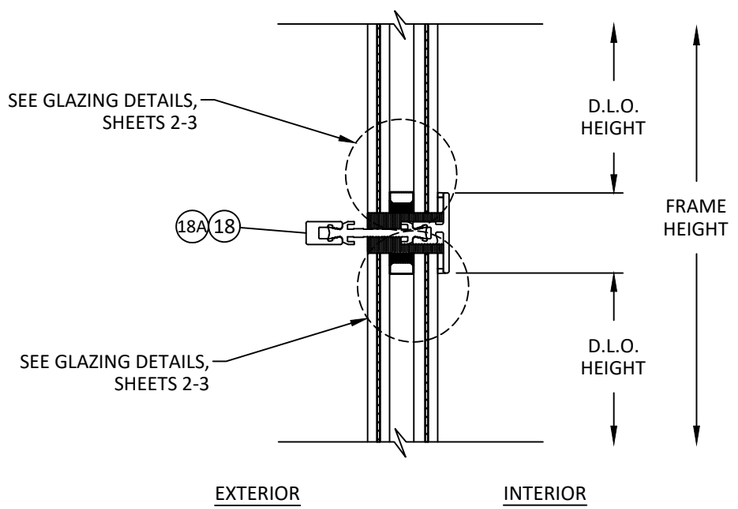

B
14

VERTICAL SECTION

OUTSIDE GLAZED - MIDRAIL

REILLY ARCHITECTURAL
901 Burman Blvd, Building 701 Calverton, NY 11933
P 631-208-0710 **F** 631-208-0711 www.reillyarch.com

TITLE: W75 INSWING & OUTSWING CASEMENT WINDOW (WZ3) (IMPACT)

VERTICAL SECTIONS

PREPARED BY:
BUILDING DROPS, INC.
1900 NE MIAMI COURT, STE. 2-15
MIAMI, FL 33132
PH: (954)399-8478
FAX: (954)744.4738
WEB: www.buildingdrops.com

REMARKS	BY	DATE
2026 FBC UPDATE	LS	06/26

THE INSTALLATION DETAILS DESCRIBED HEREIN ARE GENERIC AND MAY NOT REFLECT ACTUAL CONDITIONS FOR A SPECIFIC SITE. IF SITE CONDITIONS CAUSE INSTALLATION TO DEVIATE FROM THE REQUIREMENTS DETAILED HEREIN, A LICENSED ENGINEER OR ARCHITECT SHALL PREPARE SITE SPECIFIC DOCUMENTS FOR USE WITH THIS DOCUMENT.

HERMES F. NORERO
LICENSE
No. 73778
STATE OF
FLORIDA
PROFESSIONAL ENGINEER

HERMES F. NORERO, P.E.
FLORIDA LICENSE NO. 73778
BUILDING DROPS, INC
1900 NE MIAMI COURT, STE. 2-15
MIAMI, FL 33132
FBPE CERT. OF AUTHORIZATION No. 29578

FL #: FL47694

DATE: 05.21.2025

DWG. BY: JR | CHK. BY: HFN

SCALE: NTS

DWG. #: RWD019

SHEET: 14 | REV. A

OF 25

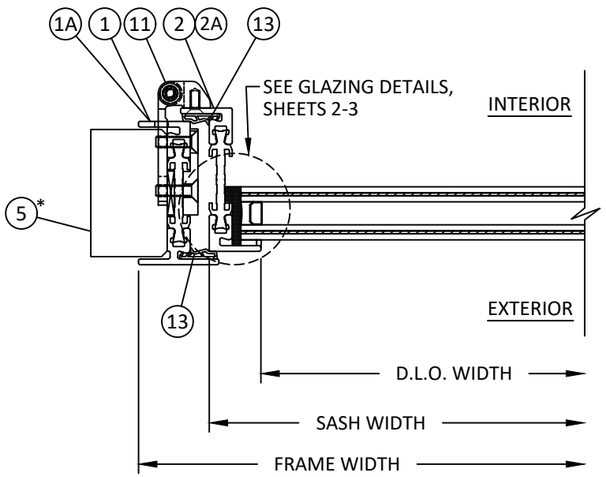

A 15 HORIZONTAL SECTION

INSIDE GLAZED - HINGE JAMB
INSWING CASEMENT

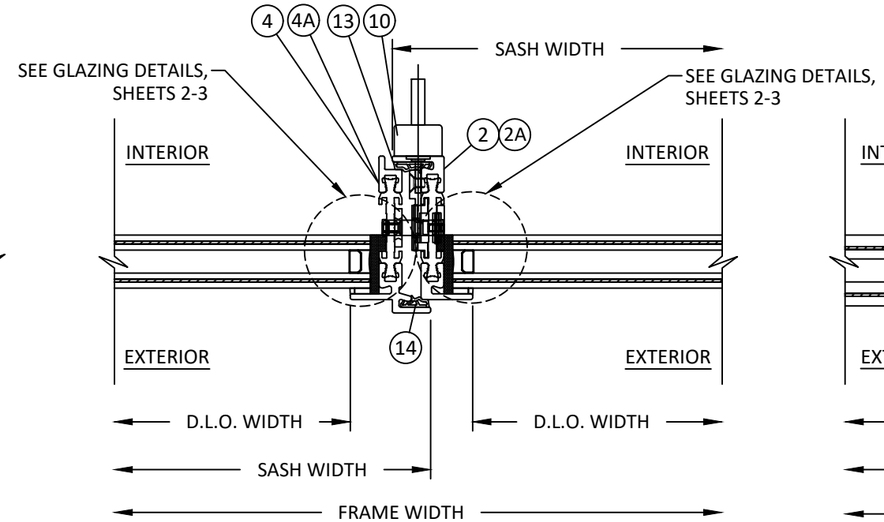

B 15 HORIZONTAL SECTION

INSIDE GLAZED - MEETING STILE
INSWING CASEMENT

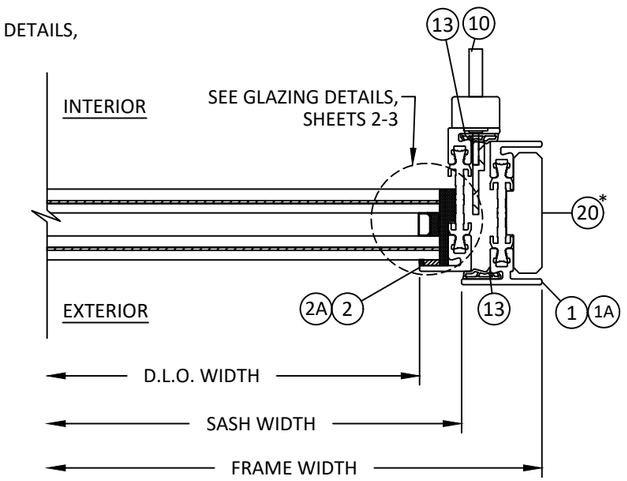

C 15 HORIZONTAL SECTION

INSIDE GLAZED - LOCK JAMB
INSWING CASEMENT

*NOTE: BLOCKING DEPENDENT ON INSTALLATION. REFER TO SHEETS 23-25 FOR MORE DETAILS.

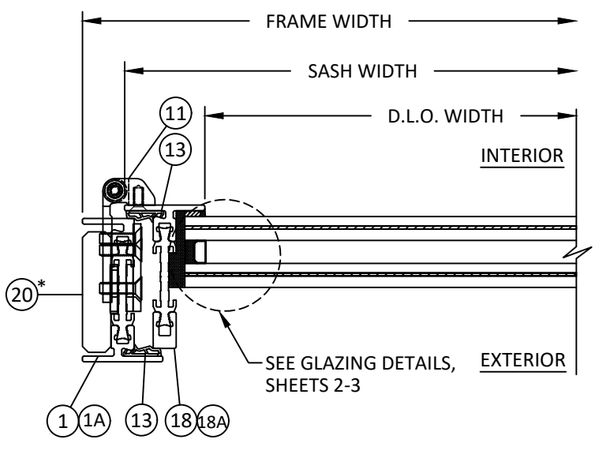

D 15 HORIZONTAL SECTION

OUTSIDE GLAZED - HINGE JAMB
INSWING CASEMENT

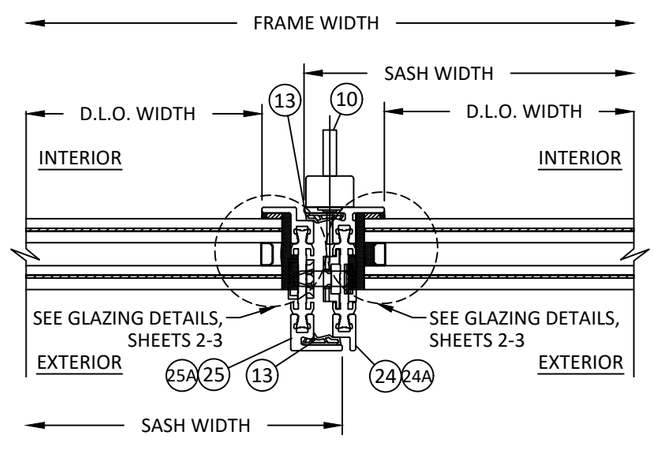

E 15 HORIZONTAL SECTION

OUTSIDE GLAZED - MEETING STILE
INSWING CASEMENT

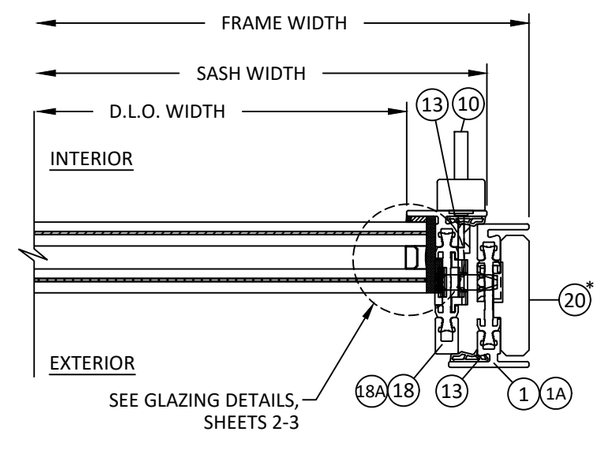

F 15 HORIZONTAL SECTION

OUTSIDE GLAZED - LOCK JAMB
INSWING CASEMENT

REILLY ARCHITECTURAL
901 Burman Blvd, Building 701 Calverton, NY 11933
P 631-208-0710 F 631-208-0711 www.reillyarch.com

TITLE: W75 INSWING & OUTSWING CASEMENT WINDOW (WZ3) (IMPACT)

HORIZONTAL SECTIONS

PREPARED BY:
BUILDING DROPS, INC.
1900 NE MIAMI COURT, STE. 2-15
MIAMI, FL 33132
PH: (954)399-8478
FAX: (954)744.4738
WEB: www.buildingdrops.com

REMARKS	BY	DATE
2026 FBC UPDATE	LS	06/26

THE INSTALLATION DETAILS DESCRIBED HEREIN ARE GENERIC AND MAY NOT REFLECT ACTUAL CONDITIONS FOR A SPECIFIC SITE. IF SITE CONDITIONS CAUSE INSTALLATION TO DEVIATE FROM THE REQUIREMENTS DETAILED HEREIN, A LICENSED ENGINEER OR ARCHITECT SHALL PREPARE SITE SPECIFIC DOCUMENTS FOR USE WITH THIS DOCUMENT.

HERMES F. NORERO
LICENSE
No. 73778
STATE OF FLORIDA
PROFESSIONAL ENGINEER

HERMES F. NORERO, P.E.
REGISTERED NUMBER
BUILDING DROPS, INC
1900 NE MIAMI COURT, STE. 2-15
MIAMI, FL 33132
FBPE CERT. OF AUTHORIZATION No. 29578

FL #: FL47694

DATE: 05.21.2025

DWG. BY: JR | CHK. BY: HFN

SCALE: NTS

DWG. #: RWD019

SHEET: 15 OF 25 | REV. A

7/9/2026 3:05 PM
c:\users\lucianosanchez\building drops, inc\building drops landing - documents\common\projects\2026 code change projects\reilly architectural\cc-26-0587.1 - 2026 code change\dwgs\fl47694-r0\rwd019.dwg

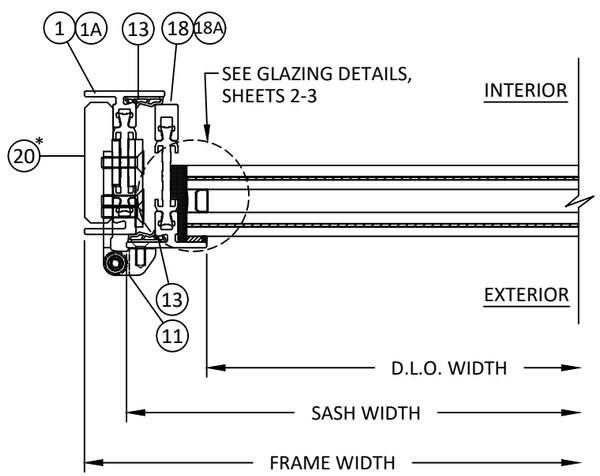

A 16 HORIZONTAL SECTION

INSIDE GLAZED - HINGE JAMB
OUTSWING CASEMENT

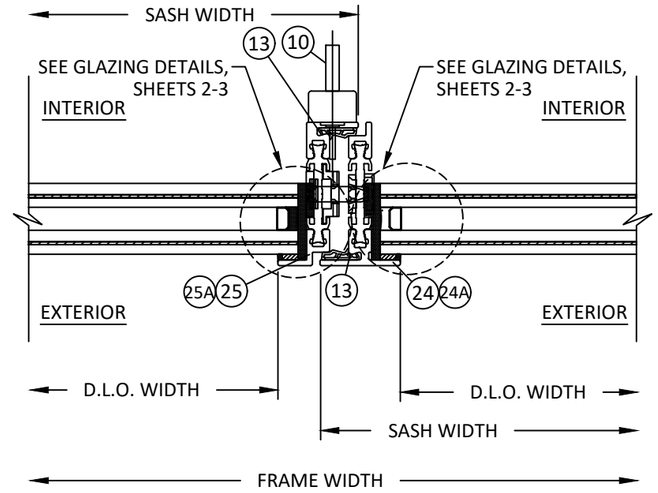

B 16 HORIZONTAL SECTION

INSIDE GLAZED - MEETING STILE
OUTSWING CASEMENT

*NOTE: BLOCKING DEPENDENT ON INSTALLATION. REFER TO SHEETS 23-25 FOR MORE DETAILS.

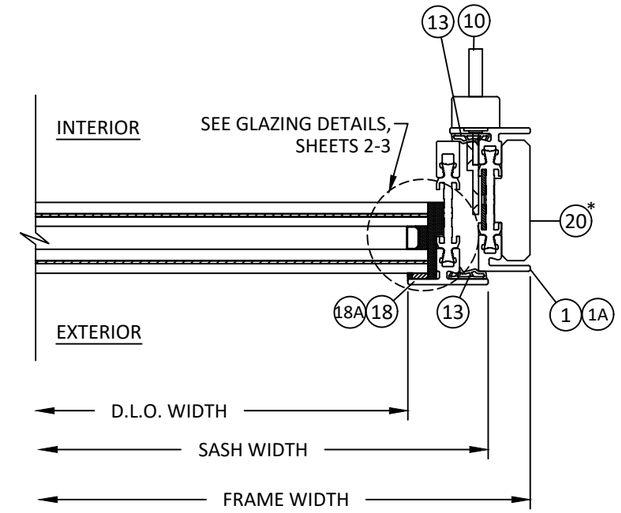

C 16 HORIZONTAL SECTION

INSIDE GLAZED - LOCK JAMB
OUTSWING CASEMENT

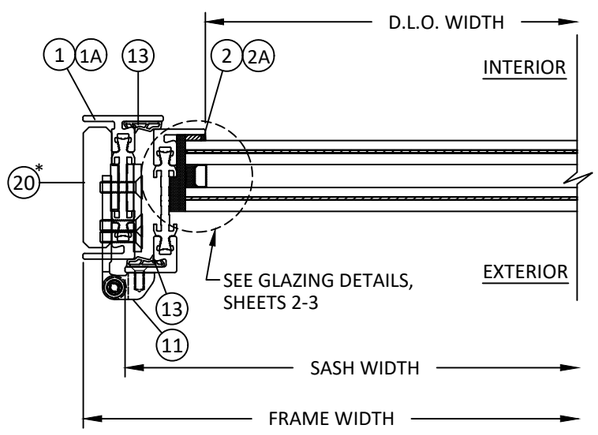

D 16 HORIZONTAL SECTION

OUTSIDE GLAZED - HINGE JAMB
OUTSWING CASEMENT

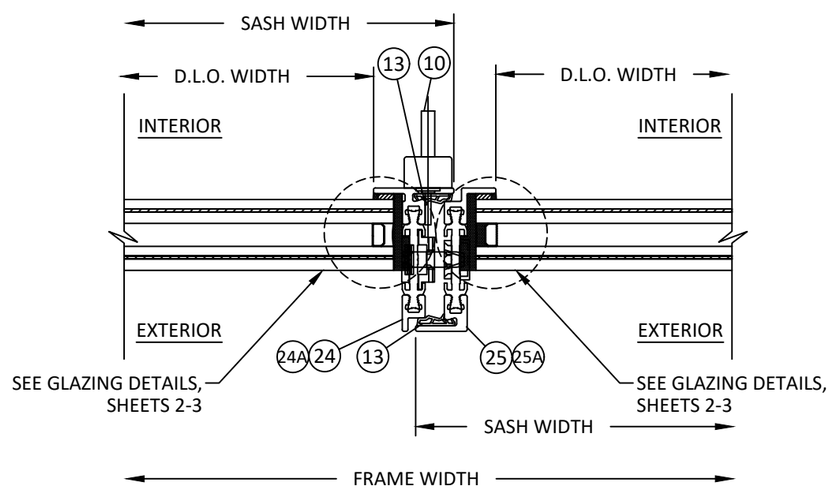

E 16 HORIZONTAL SECTION

OUTSIDE GLAZED - MEETING STILE
OUTSWING CASEMENT

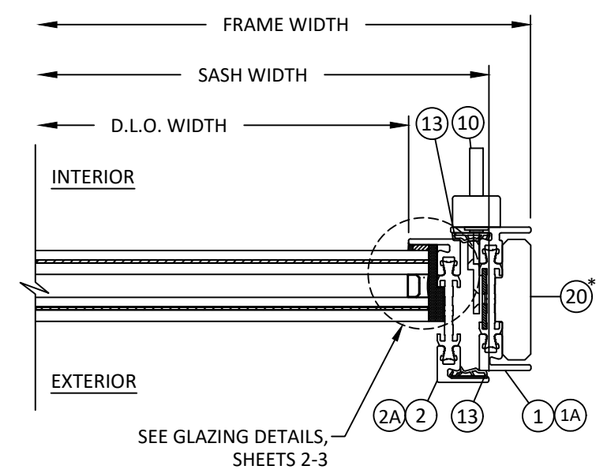

F 16 HORIZONTAL SECTION

OUTSIDE GLAZED - LOCK JAMB
OUTSWING CASEMENT

REILLY ARCHITECTURAL
901 Burman Blvd, Building 701 Calverton, NY 11933
P 631-208-0710 F 631-208-0711 www.reillyarch.com

TITLE: W75 INSWING & OUTSWING CASEMENT WINDOW (WZ3) (IMPACT)

HORIZONTAL SECTIONS

PREPARED BY:
BUILDING DROPS, INC.
1900 NE MIAMI COURT, STE. 2-15
MIAMI, FL 33132
PH: (954)399-8478
FAX: (954)744.4738
WEB: www.buildingdrops.com

REMARKS	BY	DATE
2026 FBC UPDATE	LS	06/26

THE INSTALLATION DETAILS DESCRIBED HEREIN ARE GENERIC AND MAY NOT REFLECT ACTUAL CONDITIONS FOR A SPECIFIC SITE. IF SITE CONDITIONS CAUSE INSTALLATION TO DEVIATE FROM THE REQUIREMENTS DETAILED HEREIN, A LICENSED ENGINEER OR ARCHITECT SHALL PREPARE SITE SPECIFIC DOCUMENTS FOR USE WITH THIS DOCUMENT.

HERMES F. NORERO LICENSE No. 73778 STATE OF FLORIDA PROFESSIONAL ENGINEER

HERMES F. NORERO, P.E.
FLORIDA P.E. No. 73778
BUILDING DROPS, INC
1900 NE MIAMI COURT, STE. 2-15
MIAMI, FL 33132
FBPE CERT. OF AUTHORIZATION No. 29578

FL #: FL47694

DATE: 05.21.2025

DWG. BY: JR | CHK. BY: HFN

SCALE: NTS

DWG. #: RWD019

SHEET: 16 | REV. A

OF 25

7/9/2026 3:05 PM
c:\users\lucianosanchez\building drops, inc\building drops landing - documents\common\projects\2026 code change projects\reilly architectural\cc-26-0587.1 - 2026 code change\dwgs\fl47694-r0\rwd019.dwg

7/9/2026 3:05 PM
c:\users\lucianosanchez\building drops, inc\building drops landing - documents\common\projects\2026 code change projects\reilly architectural\cc-26-0587.1 - 2026 code change\dwgs\fl47694-r0\rwd019.dwg

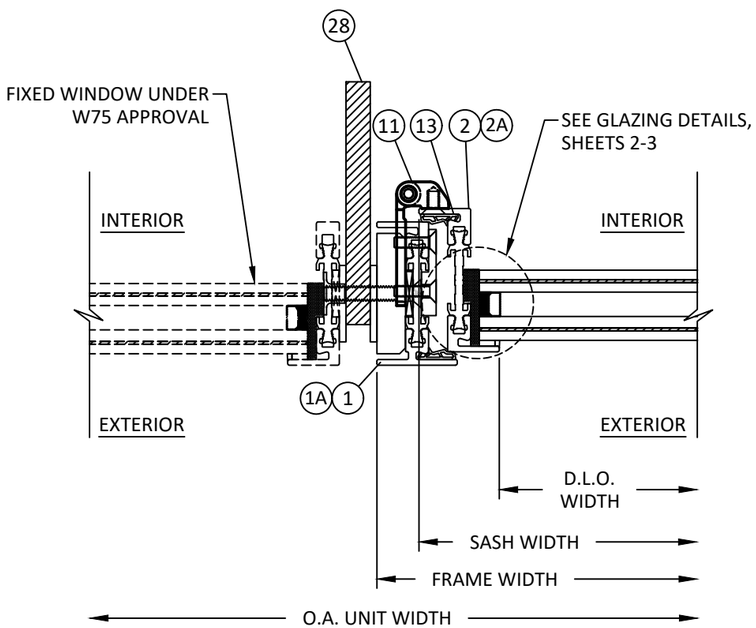

A 17 HORIZONTAL SECTION

1/2" X 5" MULLION DETAIL

NOTE: VERTICAL MULLION DETAIL SHOWN QUALIFIED AS HORIZONTAL MULLION.

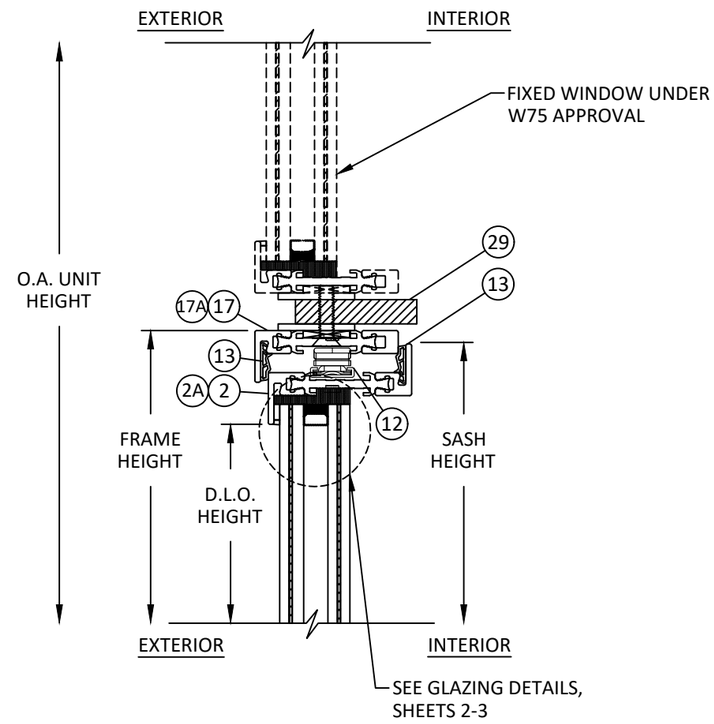

B 17 VERTICAL SECTION

1/2" X 2-1/2" MULLION DETAIL

NOTE: HORIZONTAL MULLION DETAIL SHOWN QUALIFIED AS VERTICAL MULLION.

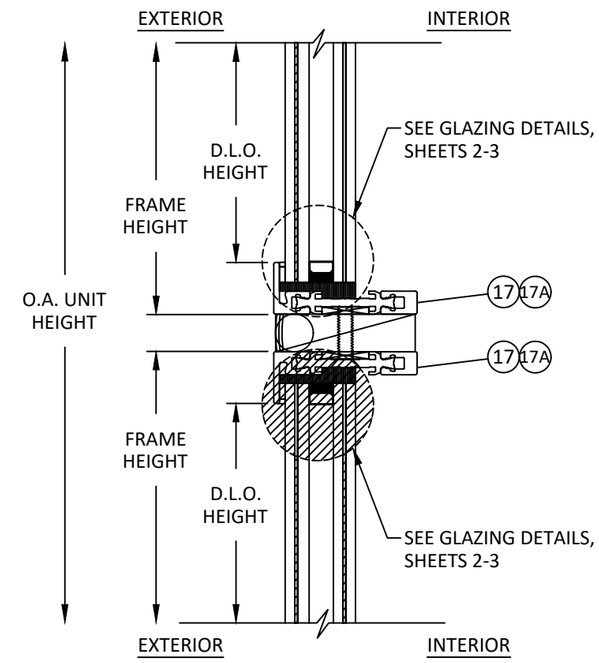

C 17 VERTICAL SECTION

TRANSOM TO SIDELITE MULLION

REILLY ARCHITECTURAL
901 Burman Blvd, Building 701 Calverton, NY 11933
P 631-208-0710 F 631-208-0711 www.reillyarch.com

TITLE: W75 INSWING & OUTSWING CASEMENT WINDOW (WZ3) (IMPACT)

MULLION SECTIONS

PREPARED BY:
BUILDING DROPS, INC.
1900 NE MIAMI COURT, STE. 2-15
MIAMI, FL 33132
PH: (954)399-8478
FAX: (954)744.4738
WEB: www.buildingdrops.com

REMARKS	BY	DATE
2026 FBC UPDATE	LS	06/26

THE INSTALLATION DETAILS DESCRIBED HEREIN ARE GENERIC AND MAY NOT REFLECT ACTUAL CONDITIONS FOR A SPECIFIC SITE. IF SITE CONDITIONS CAUSE INSTALLATION TO DEVIATE FROM THE REQUIREMENTS DETAILED HEREIN, A LICENSED ENGINEER OR ARCHITECT SHALL PREPARE SITE SPECIFIC DOCUMENTS FOR USE WITH THIS DOCUMENT.

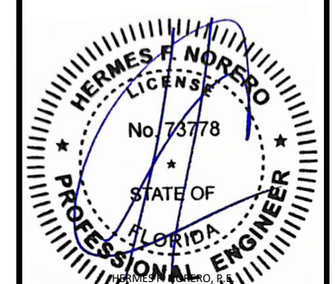

HERMES F. NORERO, P.E.
FLORIDA P.E. No. 73778
BUILDING DROPS, INC
1900 NE MIAMI COURT, STE. 2-15
MIAMI, FL 33132
FBPE CERT. OF AUTHORIZATION No. 29578

FL #: FL47694

DATE: 05.21.2025

DWG. BY: JR | CHK. BY: HFN

SCALE: NTS

DWG. #: RWD019

SHEET: 17 | REV. A

OF 25

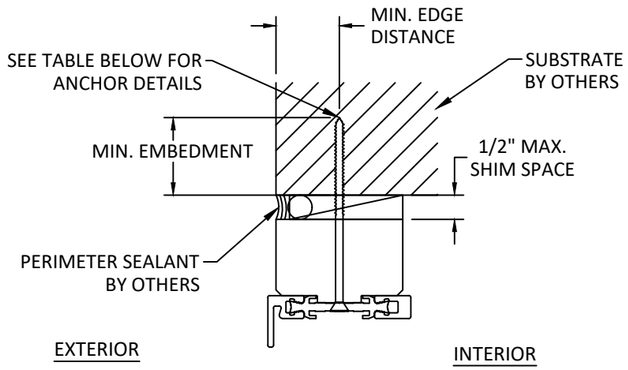

A / 18 VERTICAL SECTION

HEAD - THROUGH FRAME
JAMB AND SILL SIMILAR
INSIDE GLAZED

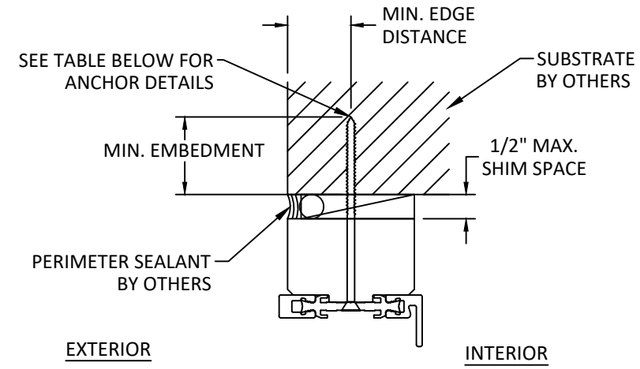

B / 18 VERTICAL SECTION

HEAD - THROUGH FRAME
JAMB AND SILL SIMILAR
OUTSIDE GLAZED

INSTALLATION NOTES:

1. ONE (1) INSTALLATION ANCHOR IS REQUIRED AT EACH ANCHOR LOCATION SHOWN FOR THROUGH FRAME INSTALLATION AND TWO (2) INSTALLATION ANCHORS ARE REQUIRED AT EACH ANCHOR LOCATION SHOWN FOR CLIP AND ANGLE INSTALLATION.
2. INSTALL INDIVIDUAL INSTALLATION ANCHORS WITHIN A TOLERANCE OF ±1/2 INCH THE DEPICTED LOCATION & SPACING IN THE ANCHOR LAYOUT DETAILS (I.E., WITHOUT CONSIDERATION OF TOLERANCES). TOLERANCES ARE NOT CUMULATIVE FROM ONE INSTALLATION ANCHOR TO THE NEXT.
3. SHIM AS REQUIRED AT EACH INSTALLATION ANCHOR WITH LOAD BEARING SHIM(S). MAXIMUM ALLOWABLE SHIM STACK TO BE 1/2 INCH. SHIM WHERE SPACE OF 1/16 INCH OR GREATER OCCURS. SHIM(S) SHALL BE CONSTRUCTED OF HIGH DENSITY PLASTIC OR BETTER.
4. MINIMUM EMBEDMENT AND EDGE DISTANCE EXCLUDE WALL FINISHES, INCLUDING BUT NOT LIMITED TO STUCCO, FOAM, BRICK VENEER, AND SIDING.
5. INSTALLATION ANCHORS AND ASSOCIATED HARDWARE MUST BE MADE OF CORROSION RESISTANT MATERIAL OR HAVE A CORROSION RESISTANT COATING:
   - FASTENERS USED WITHIN 3,000 FEET OF A SALTWATER COASTLINE AND INSTALLED IN ENCLOSED SPACES SHALL BE GALVANIZED IN ACCORDANCE WITH SECTION 1711.1.1 (E.G., ASTM A153 CLASS D, ASTM A641 CLASS 3S, OR EQUIVALENT CORROSION RESISTANCE).
   - CONNECTORS AND METAL PLATES USED WITHIN 3,000 FEET OF A SALTWATER COASTLINE SHALL BE STANDARD GALVANIZED IN ACCORDANCE WITH SECTION 1711.1.2 (E.G., ASTM A653 G90, ASTM A123, OR PROTECTIVE COATING PER TPI 1).
6. FOR MASONRY OR CONCRETE OPENINGS, A 1X WOOD BUCK MAY BE USED (OPTIONAL) AS LONG AS THE MINIMUM EMBEDMENT AND EDGE DISTANCE REQUIREMENTS ARE STILL MET WITHIN THE CORRESPONDING HOST SUBSTRATE. SEE GENERAL NOTE #3 ON SHEET 1 FOR MORE INFORMATION.
7. FOR HOLLOW BLOCK AND GROUT FILLED BLOCK, DO NOT INSTALL INSTALLATION ANCHORS INTO MORTAR JOINTS. EDGE DISTANCE IS MEASURED FROM FREE EDGE OF BLOCK OR EDGE OF MORTAR JOINT INTO FACE SHELL OF BLOCK.
8. INSTALLATION ANCHORS SHALL BE INSTALLED IN ACCORDANCE WITH ANCHOR MANUFACTURER'S INSTALLATION INSTRUCTIONS, AND ANCHORS SHALL NOT BE USED IN SUBSTRATES WITH STRENGTHS LESS THAN THE MINIMUM STRENGTH SPECIFIED BY THE ANCHOR MANUFACTURER.

ANCHOR SCHEDULE

METHOD	QUANTITY PER LOCATION	SUBSTRATE	ANCHOR TYPE	MIN. EMBEDMENT	MIN. EDGE DISTANCE
THROUGH FRAME	1	WOOD: MIN. SG = 0.55	#10 / #12 WOOD SCREW	1.50"	0.75"
		METAL: 18 GAUGE STEEL, MIN. Fy = 33KSI ALUMINUM: 1/8" MIN., 6063-T5	#10 / #12 SELF-DRILLING SCREW	3 THREADS MIN PENETRATION BEYOND STRUCTURE	0.50"
		CONCRETE: f'c=3000PSI	3/16" / 1/4" ITW TAPCON	1.25"	2.50"
		MASONRY: CMU per ASTM C90 MIN. 2000 PSI	3/16" / 1/4" ITW TAPCON	1.00"	4.00"
ALUMINUM / STEEL FLAT CLIP, ALUMINUM / STEEL BENT EXTERIOR CLIP, ALUMINUM / STEEL BENT INTERIOR CLIP, ALUMINUM / STEEL ANGLE	2	WOOD: MIN. SG = 0.55	#10 / #12 WOOD SCREW	1.50"	0.75"
		METAL: 18 GAUGE STEEL, MIN. Fy = 33KSI ALUMINUM: 1/8" MIN., 6063-T5	#10 / #12 SELF-DRILLING SCREW	3 THREADS MIN PENETRATION BEYOND STRUCTURE	0.50"
		CONCRETE: f'c=3000PSI	3/16" / 1/4" ITW TAPCON	1.25"	2.50"
		MASONRY: CMU per ASTM C90 MIN. 2000 PSI	3/16" / 1/4" ITW TAPCON	1.00"	4.00"

REILLY ARCHITECTURAL
901 Burman Blvd, Building 701 Calverton, NY 11933
P 631-208-0710 F 631-208-0711 www.reillyarch.com

TITLE: W75 INSWING & OUTSWING CASEMENT WINDOW (WZ3) (IMPACT)
ANCHOR DETAILS, ANCHOR SCHEDULE, & INSTALLATION NOTES

PREPARED BY:
BUILDING DROPS, INC.
1900 NE MIAMI COURT, STE. 2-15
MIAMI, FL 33132
PH: (954)399-8478
FAX: (954)744.4738
WEB: www.buildingdrops.com

REMARKS	BY	DATE
2026 FBC UPDATE	LS	06/26

THE INSTALLATION DETAILS DESCRIBED HEREIN ARE GENERIC AND MAY NOT REFLECT ACTUAL CONDITIONS FOR A SPECIFIC SITE. IF SITE CONDITIONS CAUSE INSTALLATION TO DEVIATE FROM THE REQUIREMENTS DETAILED HEREIN, A LICENSED ENGINEER OR ARCHITECT SHALL PREPARE SITE SPECIFIC DOCUMENTS FOR USE WITH THIS DOCUMENT.

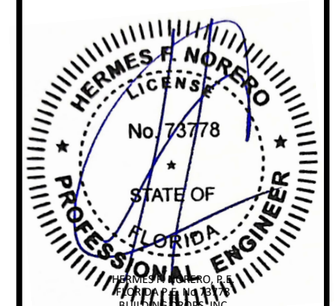

HERMES F. NORERO, P.E.
FLORIDA P.E. No. 73778
BUILDING DROPS, INC
1900 NE MIAMI COURT, STE. 2-15
MIAMI, FL 33132
FBPE CERT. OF AUTHORIZATION No. 29578

FL #: FL47694

DATE: 05.21.2025

DWG. BY: JR | CHK. BY: HFN

SCALE: NTS

DWG. #: RWD019

SHEET: 18 | REV. A

7/9/2026 3:05 PM
c:\users\lucianosanchez\building drops, inc\building drops landing - documents\common\projects\2026 code change projects\reilly architectural\cc-26-0587.1 - 2026 code change\dwgs\fl47694-r0\rwd019.dwg

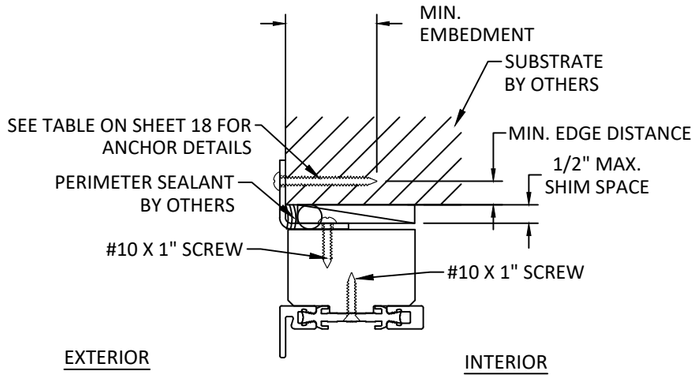

A 19 VERTICAL SECTION

HEAD - ALUMINUM/STEEL BENT EXT. CLIP
JAMB AND SILL SIMILAR
INSIDE GLAZED

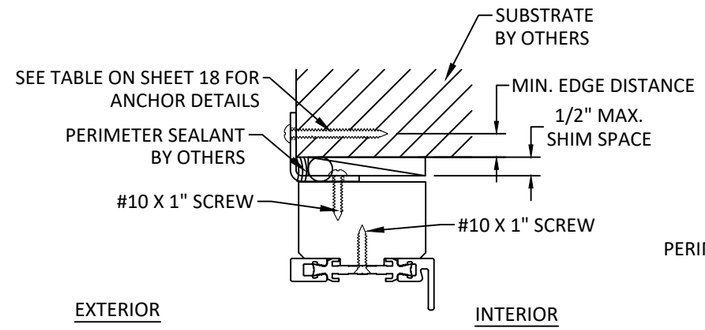

B 19 VERTICAL SECTION

HEAD - ALUMINUM/STEEL BENT EXT. CLIP
JAMB AND SILL SIMILAR
OUTSIDE GLAZED

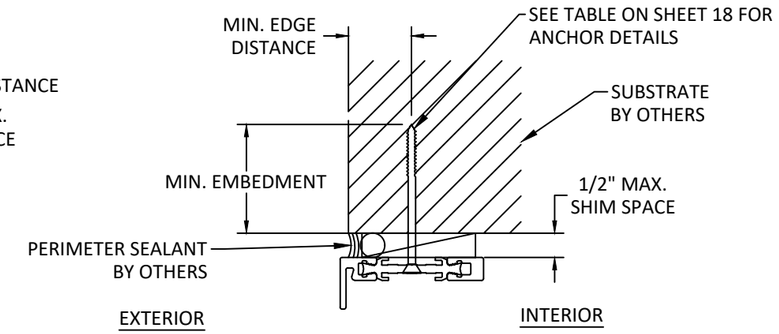

C 19 VERTICAL SECTION

HEAD - THROUGH FRAME
JAMB AND SILL SIMILAR
INSIDE GLAZED

NOTE: THROUGH FRAME INSTALLATION WITHOUT BLOCKING ONLY QUALIFIED FOR FLAT PROFILE.

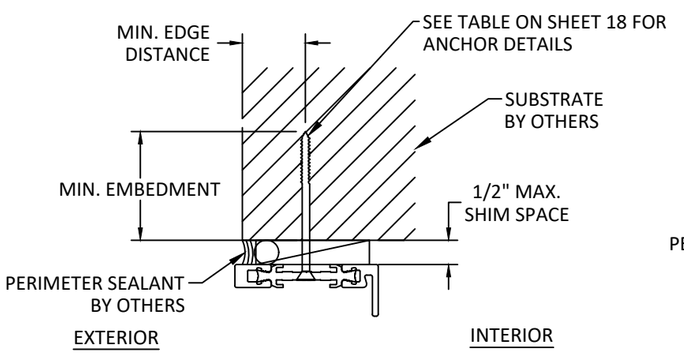

D 19 VERTICAL SECTION

HEAD - THROUGH FRAME
JAMB AND SILL SIMILAR
OUTSIDE GLAZED

NOTE: THROUGH FRAME INSTALLATION WITHOUT BLOCKING ONLY QUALIFIED FOR FLAT PROFILE.

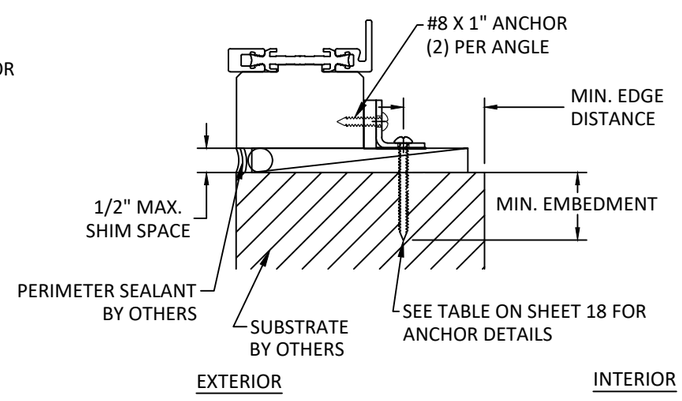

E 19 VERTICAL SECTION

SILL - 3/4" X 3/4" ALUMINUM/STEEL ANGLE
OUTSIDE GLAZED

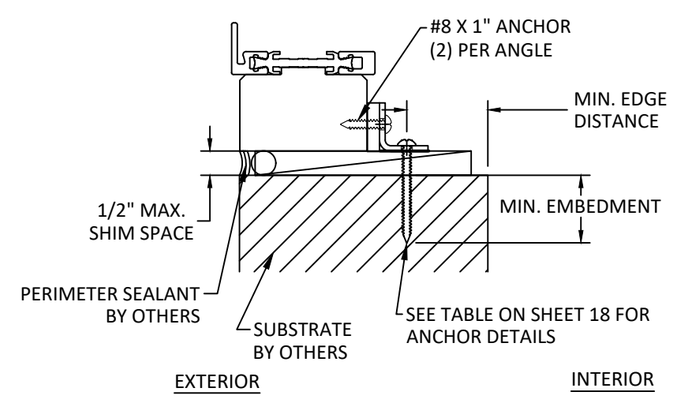

F 19 VERTICAL SECTION

SILL - 3/4" X 3/4" ALUMINUM/STEEL ANGLE
INSIDE GLAZED

REILLY ARCHITECTURAL
901 Burman Blvd, Building 701 Calverton, NY 11933
P 631-208-0710 F 631-208-0711 www.reillyarch.com

TITLE: W75 INSWING & OUTSWING CASEMENT WINDOW (WZ3) (IMPACT)
ANCHOR DETAILS

PREPARED BY:
BUILDING DROPS, INC.
1900 NE MIAMI COURT, STE. 2-15
MIAMI, FL 33132
PH: (954)399-8478
FAX: (954)744.4738
WEB: www.buildingdrops.com

REMARKS	BY	DATE
2026 FBC UPDATE	LS	06/26

THE INSTALLATION DETAILS DESCRIBED HEREIN ARE GENERIC AND MAY NOT REFLECT ACTUAL CONDITIONS FOR A SPECIFIC SITE. IF SITE CONDITIONS CAUSE INSTALLATION TO DEVIATE FROM THE REQUIREMENTS DETAILED HEREIN, A LICENSED ENGINEER OR ARCHITECT SHALL PREPARE SITE SPECIFIC DOCUMENTS FOR USE WITH THIS DOCUMENT.

HERMES F. NORERO, P.E.
FLORIDA P.E. LICENSE NO. 73778
BUILDING DROPS, INC
1900 NE MIAMI COURT, STE. 2-15
MIAMI, FL 33132
FBPE CERT. OF AUTHORIZATION No. 29578

FL #: FL47694

DATE: 05.21.2025

DWG. BY: JR | CHK. BY: HFN

SCALE: NTS

DWG. #: RWD019

SHEET: 19 | REV. A

7/9/2026 3:06 PM
c:\users\lucianosanchez\building drops, inc\building drops landing - documents\common\projects\2026 code change projects\reilly architectural\cc-26-0587.1 - 2026 code change\dwgs\fl47694-r0\rwd019.dwg

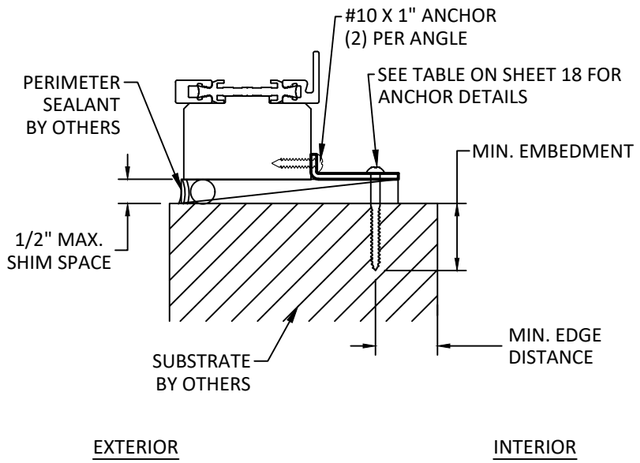

A 20 VERTICAL SECTION

SILL - 1/2" X 1-4/5" ALUMINUM/STEEL ANGLE
OUTSIDE GLAZED

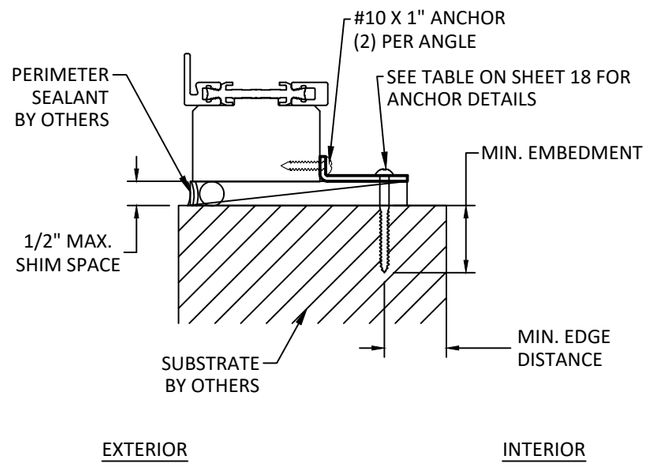

B 20 VERTICAL SECTION

SILL - 1/2" X 1-4/5" ALUMINUM/STEEL ANGLE
INSIDE GLAZED

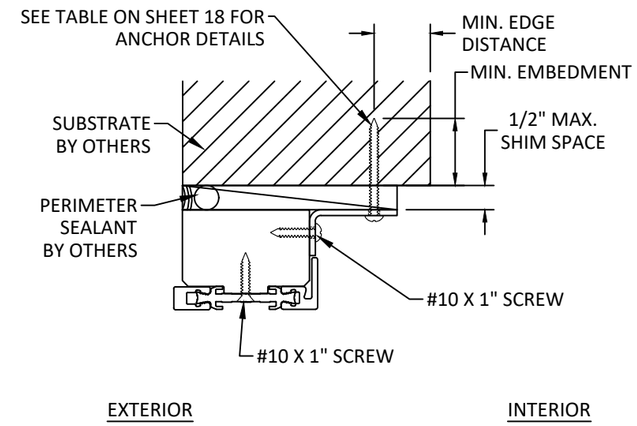

C 20 VERTICAL SECTION

HEAD - ALUMINUM/STEEL BENT INT. CLIP
JAMB SIMILAR
OUTSIDE GLAZED

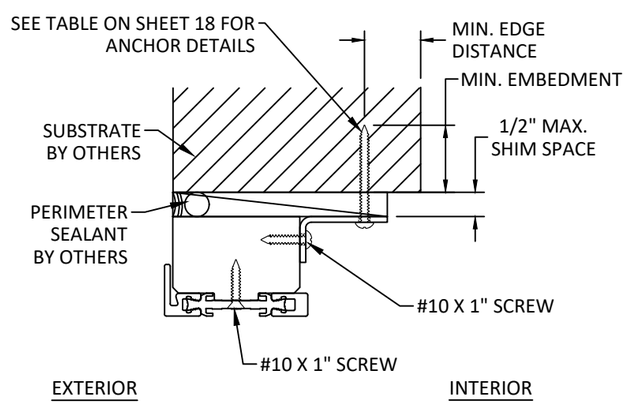

D 20 VERTICAL SECTION

HEAD - ALUMINUM/STEEL BENT INT. CLIP
JAMB SIMILAR
INSIDE GLAZED

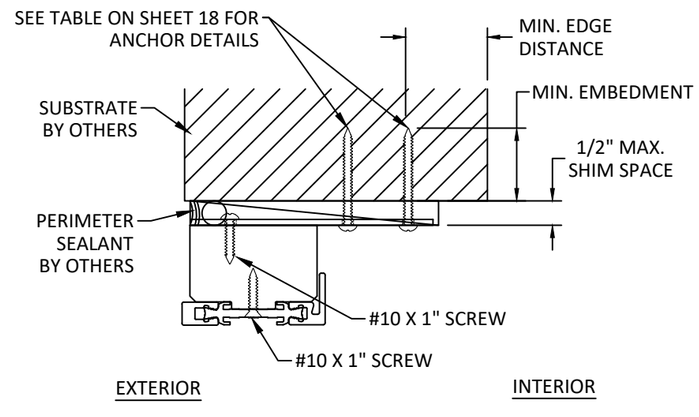

E 20 VERTICAL SECTION

HEAD - ALUMINUM/STEEL FLAT CLIP
JAMB SIMILAR
OUTSIDE GLAZED

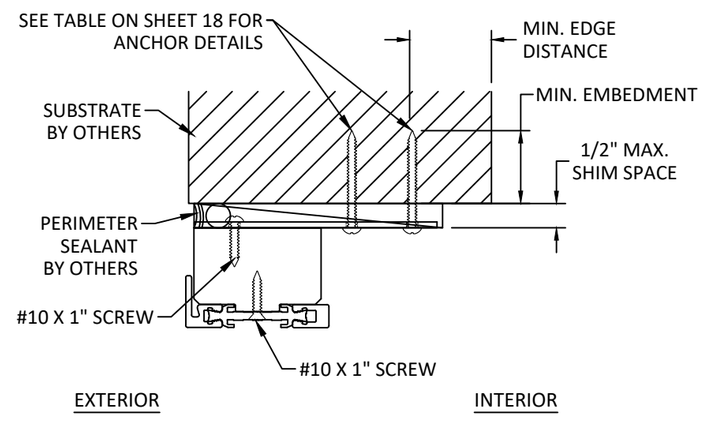

F 20 VERTICAL SECTION

HEAD - ALUMINUM/STEEL FLAT CLIP
JAMB SIMILAR
INSIDE GLAZED

REILLY ARCHITECTURAL
901 Burman Blvd, Building 701 Calverton, NY 11933
P 631-208-0710 F 631-208-0711 www.reillyarch.com

TITLE: W75 INSWING & OUTSWING CASEMENT WINDOW (WZ3) (IMPACT)

ANCHOR DETAILS

PREPARED BY:
BUILDING DROPS, INC.
1900 NE MIAMI COURT, STE. 2-15
MIAMI, FL 33132
PH: (954)399-8478
FAX: (954)744.4738
WEB: www.buildingdrops.com

REMARKS	BY	DATE
2026 FBC UPDATE	LS	06/26

THE INSTALLATION DETAILS DESCRIBED HEREIN ARE GENERIC AND MAY NOT REFLECT ACTUAL CONDITIONS FOR A SPECIFIC SITE. IF SITE CONDITIONS CAUSE INSTALLATION TO DEVIATE FROM THE REQUIREMENTS DETAILED HEREIN, A LICENSED ENGINEER OR ARCHITECT SHALL PREPARE SITE SPECIFIC DOCUMENTS FOR USE WITH THIS DOCUMENT.

HERMES F. NORERO
LICENSE
No. 73778
STATE OF
FLORIDA
PROFESSIONAL ENGINEER

HERMES F. NORERO, P.E.
LICENSE No. 73778
BUILDING DROPS, INC
1900 NE MIAMI COURT, STE. 2-15
MIAMI, FL 33132
FBPE CERT. OF AUTHORIZATION No. 29578

FL #: FL47694

DATE: 05.21.2025

DWG. BY: JR | CHK. BY: HFN

SCALE: NTS

DWG. #: RWD019

SHEET: 20 OF 25 | REV. A

7/9/2026 3:06 PM
c:\users\lucianosanchez\building drops, inc\building drops landing - documents\common\projects\2026 code change projects\reilly architectural\cc-26-0587.1 - 2026 code change\dwgs\fl47694-r0\rwd019.dwg

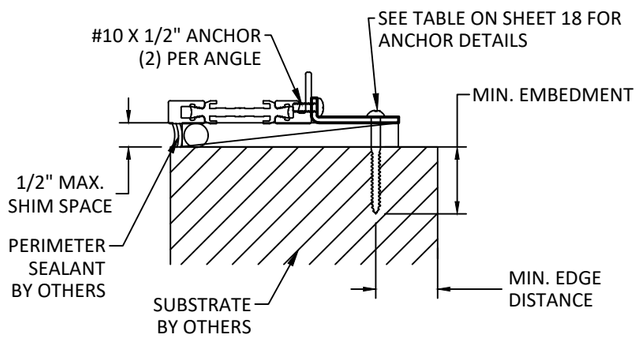

A
21

VERTICAL SECTION

SILL - 1/2" X 1-4/5" ALUMINUM/STEEL ANGLE
OUTSIDE GLAZED

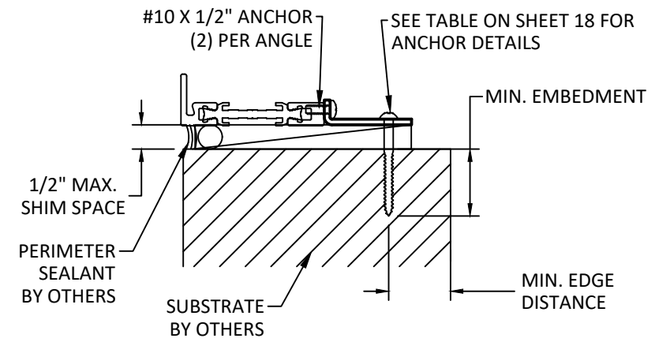

B
21

VERTICAL SECTION

SILL - 1/2" X 1-4/5" ALUMINUM/STEEL ANGLE
INSIDE GLAZED

REILLY
ARCHITECTURAL
901 Burman Blvd, Building 701 Calverton, NY 11933
P 631-208-0710 F 631-208-0711 www.reillyarch.com

TITLE: W75 INSWING & OUTSWING CASEMENT WINDOW (WZ3) (IMPACT)

ANCHOR DETAILS

PREPARED BY:
BUILDING DROPS, INC.
1900 NE MIAMI COURT, STE. 2-15
MIAMI, FL 33132
PH: (954)399-8478
FAX: (954)744.4738
WEB: www.buildingdrops.com

REMARKS	BY	DATE
2026 FBC UPDATE	LS	06/26

THE INSTALLATION DETAILS DESCRIBED HEREIN ARE GENERIC AND MAY NOT REFLECT ACTUAL CONDITIONS FOR A SPECIFIC SITE. IF SITE CONDITIONS CAUSE INSTALLATION TO DEVIATE FROM THE REQUIREMENTS DETAILED HEREIN, A LICENSED ENGINEER OR ARCHITECT SHALL PREPARE SITE SPECIFIC DOCUMENTS FOR USE WITH THIS DOCUMENT.

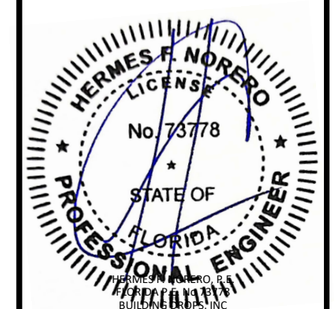

HERMES F. NORERO, P.E.
FLORIDA P.E. No. 73778
BUILDING DROPS, INC
1900 NE MIAMI COURT, STE. 2-15
MIAMI, FL 33132
FBPE CERT. OF AUTHORIZATION No. 29578

FL #: FL47694

DATE: 05.21.2025

DWG. BY: JR | CHK. BY: HFN

SCALE: NTS

DWG. #: RWD019

SHEET: 21 | REV. A

OF 25

7/9/2026 3:06 PM
c:\users\lucianosanchez\building drops, inc\building drops landing - documents\common\projects\2026 code change projects\reilly architectural\cc-26-0587.1 - 2026 code change\dwgs\fl47694-r0\rwd019.dwg

QUALIFIED FRAME PROFILE OPTIONS

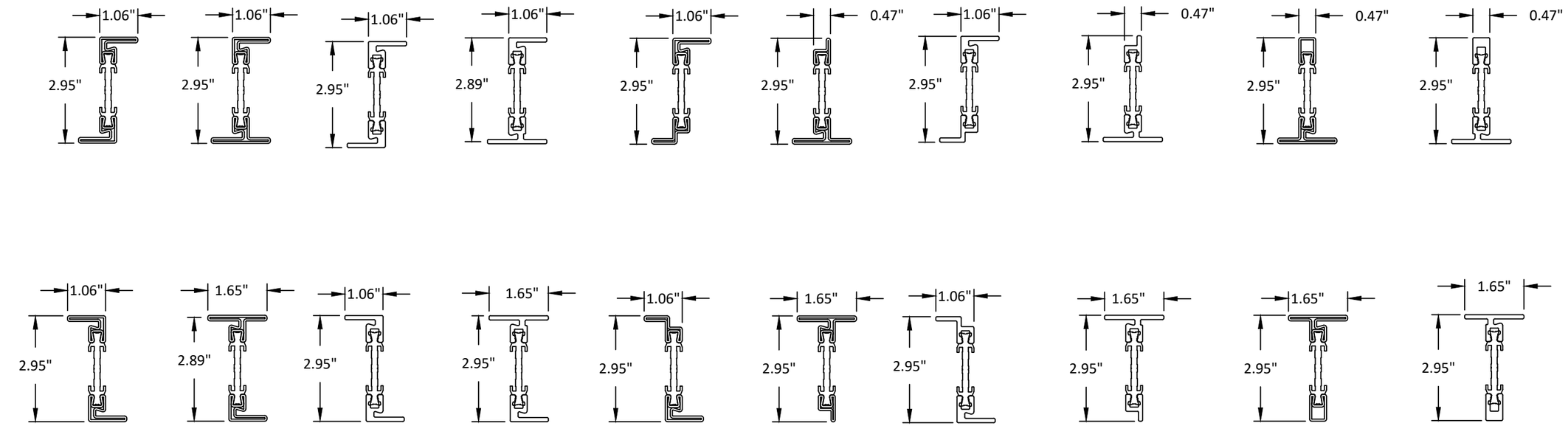

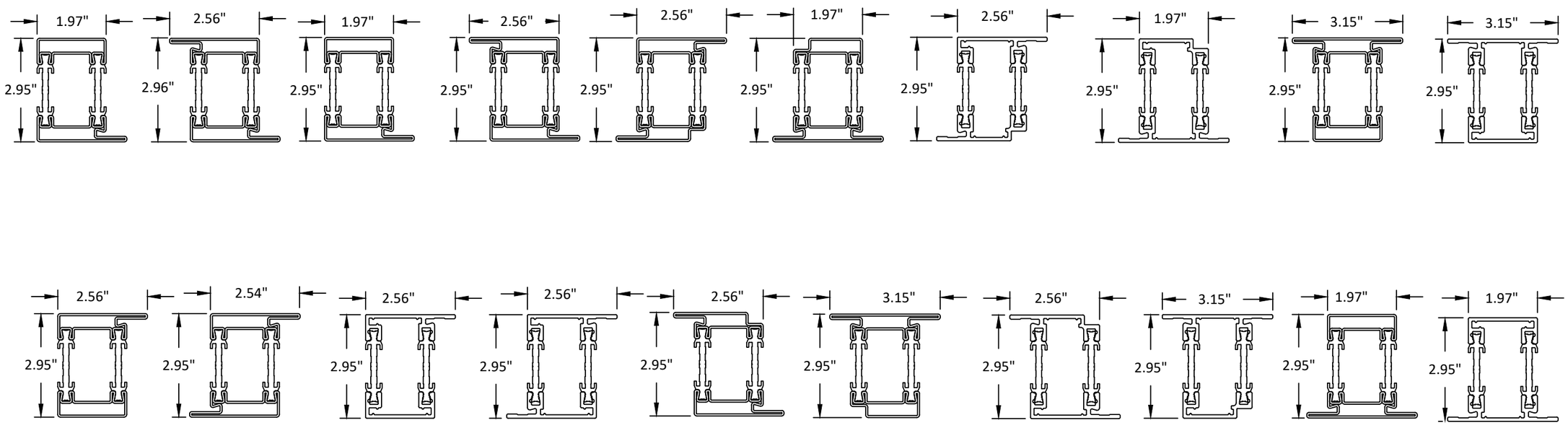

REILLY ARCHITECTURAL
901 Burman Blvd, Building 701 Calverton, NY 11933
P 631-208-0710 F 631-208-0711 www.reillyarch.com

TITLE: W75 INSWING & OUTSWING CASEMENT WINDOW (WZ3) (IMPACT)

PROFILE OPTIONS

PREPARED BY:
BUILDING DROPS, INC.
1900 NE MIAMI COURT, STE. 2-15
MIAMI, FL 33132
PH: (954)399-8478
FAX: (954)744.4738
WEB: www.buildingdrops.com

REMARKS	BY	DATE
2026 FBC UPDATE	LS	06/26

THE INSTALLATION DETAILS DESCRIBED HEREIN ARE GENERIC AND MAY NOT REFLECT ACTUAL CONDITIONS FOR A SPECIFIC SITE. IF SITE CONDITIONS CAUSE INSTALLATION TO DEVIATE FROM THE REQUIREMENTS DETAILED HEREIN, A LICENSED ENGINEER OR ARCHITECT SHALL PREPARE SITE SPECIFIC DOCUMENTS FOR USE WITH THIS DOCUMENT.

HERMES F. NORERO LICENSE No. 73778 STATE OF FLORIDA PROFESSIONAL ENGINEER

HERMES F. NORERO, P.E.
LICENSE No. 73778
BUILDING DROPS, INC
1900 NE MIAMI COURT, STE. 2-15
MIAMI, FL 33132
FBPE CERT. OF AUTHORIZATION No. 29578

FL #: FL47694

DATE: 05.21.2025

DWG. BY: JR | CHK. BY: HFN

SCALE: NTS

DWG. #: RWD019

SHEET: 22 OF 25

REV. A

7/9/2026 3:06 PM
c:\users\lucianosanchez\building drops, inc\building drops landing - documents\common\projects\2026 code change projects\reilly architectural\cc-26-0587.1 - 2026 code change\dwgs\fl47694-r0\rwd019.dwg

BILL OF MATERIALS			
ITEM#	DESCRIPTION	MATERIAL	MANUFACTURER
1	FRAME JAMB	BRONZE	OTTOSTUMM
1A	FRAME JAMB	VARIES	OTTOSTUMM
2	SASH	BRONZE	OTTOSTUMM
2A	SASH	VARIES	OTTOSTUMM
3	SILL	BRONZE	REILLY
3A	SILL	VARIES	REILLY
4	SASH	BRONZE	OTTOSTUMM
4A	SASH	VARIES	OTTOSTUMM
5	BLOCKING	PE	VARIES
6	KEEPER	STAINLESS STEEL	REILLY
7	NUT BAR	STAINLESS STEEL	REILLY
8	KEEPER	STAINLESS STEEL	REILLY
9	LOCKING POINT	VARIES	REILLY
10	OPPERATOR	STEEL	OTTOSTUMM
11	HINGE	BRASS	SWF
12	FRICTION ADJUSTER	STAINLESS STEEL	CALDWELL
13	WEATHER STRIPPING	N/A	OTTOSTUMM
14	WEATHER STRIPPING	N/A	OTTOSTUMM
15	END CAP	COMPOSITE	REILLY
16	1/2" X 1-4/5" ANGLE	6061-T6 ALUMINUM OR STAINLESS STEEL	REILLY
17	FRAME JAMB	BRONZE	OTTOSTUMM
17A	FRAME JAMB	VARIES	OTTOSTUMM
18	LOCKING RAIL	BRONZE	OTTOSTUMM
18A	LOCKING RAIL	VARIES	OTTOSTUMM
19	BLOCKING	PE	VARIES
20	BLOCKING	PE	VARIES
21	BLOCKING	PE	VARIES
22	BLOCKING	PE	VARIES
23	BENT EXTERIOR CLIP	6061-T6 ALUMINUM OR STAINLESS STEEL	REILLY
24	SASH	BRONZE	OTTOSTUMM
24A	SASH	VARIES	OTTOSTUMM
25	FRAME JAMB	BRONZE	OTTOSTUMM
25A	FRAME JAMB	VARIES	OTTOSTUMM
26	FLAT CLIP	6061-T6 ALUMINUM OR STAINLESS STEEL	REILLY
27	3/4" X 3/4" ANGLE	6061-T6 ALUMINUM OR STAINLESS STEEL	REILLY
28	1/2" X 5" BAR	STEEL	REILLY
29	2-1/2" X 1/2" BAR	STEEL	REILLY
30	BENT INTERIOR CLIP	6061-T6 ALUMINUM OR STAINLESS STEEL	REILLY

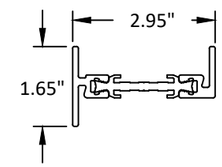

1 FRAME JAMB
BRONZE

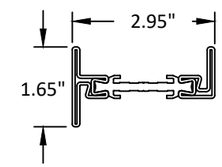

1A FRAME JAMB
VARIES

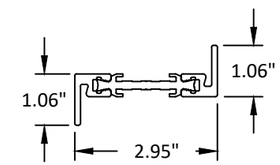

2 SASH
BRONZE

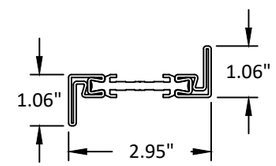

2A SASH
VARIES

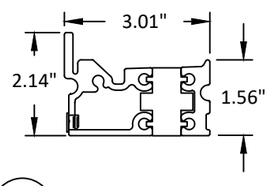

3 SILL
BRONZE

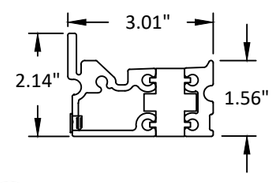

3A SILL
VARIES

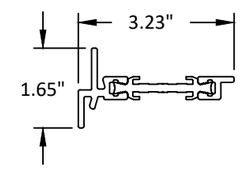

4 SASH
BRONZE

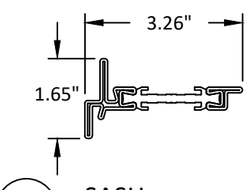

4A SASH
VARIES

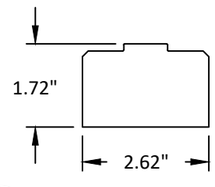

5 BLOCKING
PE

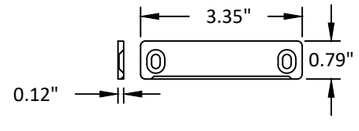

6 KEEPER
STAINLESS STEEL

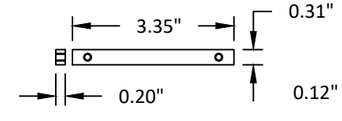

7 NUT BAR
STAINLESS STEEL

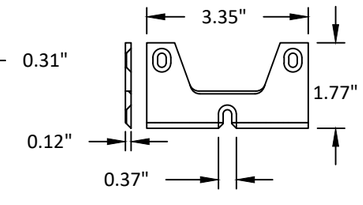

8 KEEPER
STAINLESS STEEL

REILLY ARCHITECTURAL
901 Burman Blvd, Building 701 Calverton, NY 11933
P 631-208-0710 F 631-208-0711 www.reillyarch.com

TITLE: W75 INSWING & OUTSWING CASEMENT WINDOW (WZ3) (IMPACT)

BILL OF MATERIALS & COMPONENTS

PREPARED BY:
BUILDING DROPS, INC.
1900 NE MIAMI COURT, STE. 2-15
MIAMI, FL 33132
PH: (954)399-8478
FAX: (954)744.4738
WEB: www.buildingdrops.com

REMARKS	BY	DATE
2026 FBC UPDATE	LS	06/26

THE INSTALLATION DETAILS DESCRIBED HEREIN ARE GENERIC AND MAY NOT REFLECT ACTUAL CONDITIONS FOR A SPECIFIC SITE. IF SITE CONDITIONS CAUSE INSTALLATION TO DEVIATE FROM THE REQUIREMENTS DETAILED HEREIN, A LICENSED ENGINEER OR ARCHITECT SHALL PREPARE SITE SPECIFIC DOCUMENTS FOR USE WITH THIS DOCUMENT.

HERMES F. NORERO LICENSE No. 73778 STATE OF FLORIDA PROFESSIONAL ENGINEER

HERMES F. NORERO, P.E.
FLORIDA P.E. No. 73778
BUILDING DROPS, INC
1900 NE MIAMI COURT, STE. 2-15
MIAMI, FL 33132
FBPE CERT. OF AUTHORIZATION No. 29578

FL #: FL47694

DATE: 05.21.2025

DWG. BY: JR | CHK. BY: HFN

SCALE: NTS

DWG. #: RWD019

SHEET: 23 OF 25 | REV. A

7/9/2026 3:06 PM
c:\users\lucianosanchez\building drops, inc\building drops landing - documents\common\projects\2026 code change projects\reilly architectural\cc-26-0387.1 - 2026 code change\dwgs\fl47694-r0\rwd019.dwg

7/9/2026 3:06 PM
c:\users\lucianosanchez\building drops, inc\building drops landing - documents\common\projects\2026 code change projects\reilly architectural\cc-26-0587.1 - 2026 code change\dwgs\fl47694-r0\rwd019.dwg

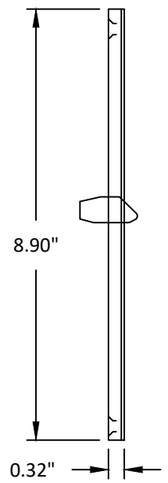

9 LOCKING POINT
VARIES

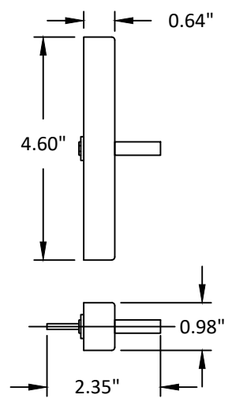

10 OPERATOR
STEEL

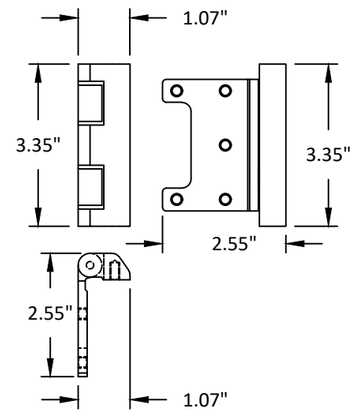

11 HINGE
BRASS

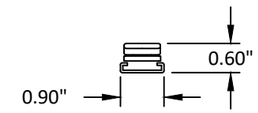

12 FRICTION ADJUSTER
STAINLESS STEEL

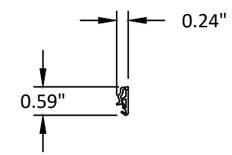

14 WEATHER STRIPPING

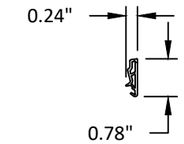

13 WEATHER STRIPPING

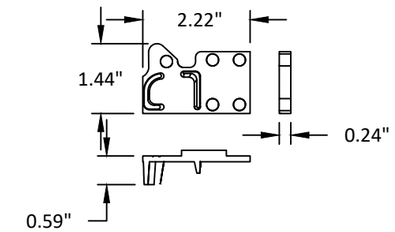

15 END CAP
COMPOSITE

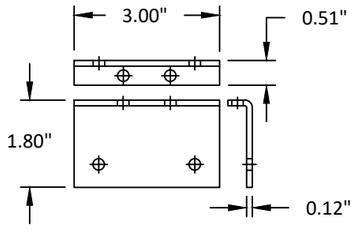

16 1/2" X 1-4/5" ANGLE
6061-T6 ALUMINUM
OR STAINLESS STEEL

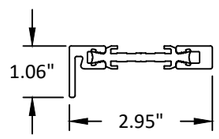

17 FRAME JAMB
BRONZE

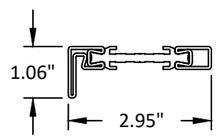

17A FRAME JAMB
VARIES

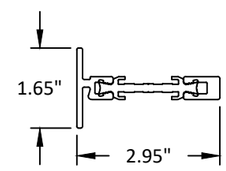

18 LOCKING RAIL
BRONZE

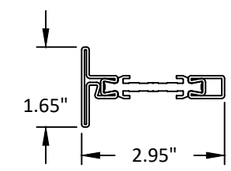

18A LOCKING RAIL
VARIES

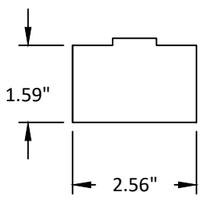

19 BLOCKING
PE

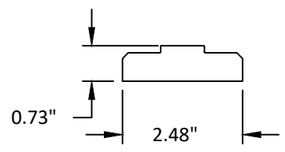

20 BLOCKING
PE

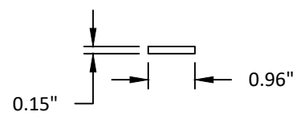

21 BLOCKING
PE

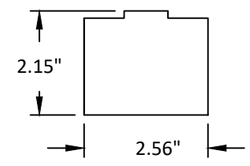

22 BLOCKING
PE

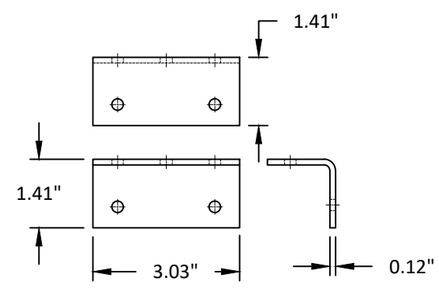

23 BENT EXTERIOR CLIP
6061-T6 ALUMINUM
OR STAINLESS STEEL

REILLY
ARCHITECTURAL
901 Burman Blvd, Building 701 Calverton, NY 11933
P 631-208-0710 F 631-208-0711 www.reillyarch.com

TITLE: W75 INSWING & OUTSWING CASEMENT WINDOW (WZ3) (IMPACT)
COMPONENTS

PREPARED BY:
BUILDING DROPS, INC.
1900 NE MIAMI COURT, STE. 2-15
MIAMI, FL 33132
PH: (954)399-8478
FAX: (954)744.4738
WEB: www.buildingdrops.com

REMARKS	BY	DATE
2026 FBC UPDATE	LS	06/26

THE INSTALLATION DETAILS DESCRIBED HEREIN ARE GENERIC AND MAY NOT REFLECT ACTUAL CONDITIONS FOR A SPECIFIC SITE. IF SITE CONDITIONS CAUSE INSTALLATION TO DEVIATE FROM THE REQUIREMENTS DETAILED HEREIN, A LICENSED ENGINEER OR ARCHITECT SHALL PREPARE SITE SPECIFIC DOCUMENTS FOR USE WITH THIS DOCUMENT.

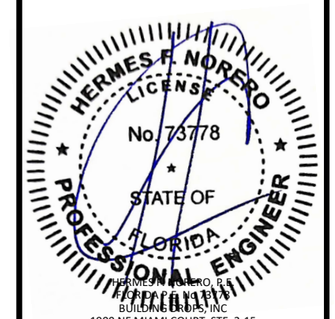

HERMES F. NORERO, P.E.
FLORIDA P.E. No. 73778
BUILDING DROPS, INC
1900 NE MIAMI COURT, STE. 2-15
MIAMI, FL 33132
FBPE CERT. OF AUTHORIZATION No. 29578

FL #: FL47694

DATE: 05.21.2025

DWG. BY: JR | CHK. BY: HFN

SCALE: NTS

DWG. #: RWD019

SHEET: 24 OF 25 | REV. A

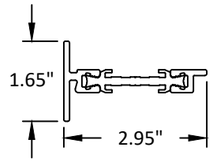

24 SASH
BRONZE

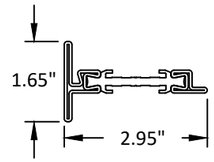

24A SASH
VARIES

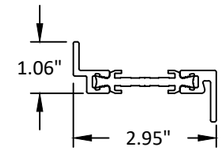

25 FRAME JAMB
BRONZE

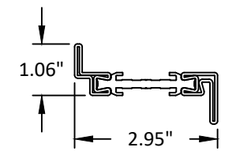

25A FRAME JAMB
VARIES

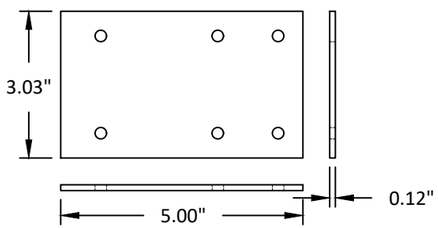

26 FLAT CLIP
6061-T6 ALUMINUM OR STAINLESS STEEL

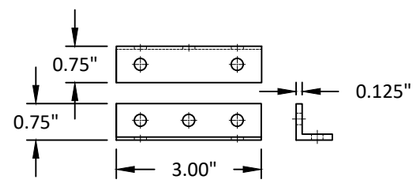

27 3/4" X 3/4" ANGLE
6061-T6 ALUMINUM OR STAINLESS STEEL

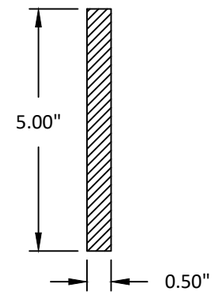

28 1/2" X 5" BAR
STEEL

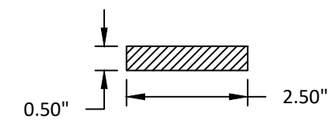

29 2-1/2" X 1/2" BAR
STEEL

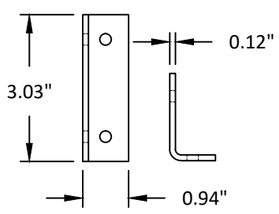

30 BENT INTERIOR CLIP
6061-T6 ALUMINUM
OR STAINLESS STEEL

REILLY ARCHITECTURAL
901 Burman Blvd, Building 701 Calverton, NY 11933
P 631-208-0710 F 631-208-0711 www.reillyarch.com

TITLE: W75 INSWING & OUTSWING CASEMENT WINDOW (WZ3) (IMPACT)
COMPONENTS

PREPARED BY:
BUILDING DROPS, INC.
1900 NE MIAMI COURT, STE. 2-15
MIAMI, FL 33132
PH: (954)399-8478
FAX: (954)744.4738
WEB: www.buildingdrops.com

REMARKS	BY	DATE
2026 FBC UPDATE	LS	06/26

THE INSTALLATION DETAILS DESCRIBED HEREIN ARE GENERIC AND MAY NOT REFLECT ACTUAL CONDITIONS FOR A SPECIFIC SITE. IF SITE CONDITIONS CAUSE INSTALLATION TO DEVIATE FROM THE REQUIREMENTS DETAILED HEREIN, A LICENSED ENGINEER OR ARCHITECT SHALL PREPARE SITE SPECIFIC DOCUMENTS FOR USE WITH THIS DOCUMENT.

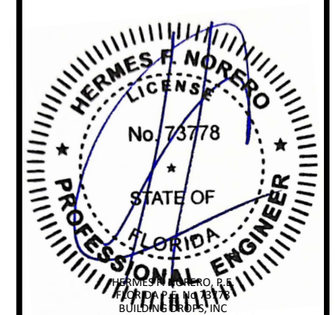

HERMES F. NORERO, P.E.
FLORIDA LICENSE No. 73778
BUILDING DROPS, INC
1900 NE MIAMI COURT, STE. 2-15
MIAMI, FL 33132
FBPE CERT. OF AUTHORIZATION No. 29578

FL #: FL47694

DATE: 05.21.2025

DWG. BY: JR | CHK. BY: HFN

SCALE: NTS

DWG. #: RWD019

SHEET: 25 OF 25 | REV. A

7/9/2026 3:06 PM
c:\users\lucianosanchez\building drops, inc\building drops landing - documents\common\projects\2026 code change projects\reilly architectural\cc-26-0587.1 - 2026 code change\dwgs\fl47694-r0\rwd019.dwg